AXI 多通道直接内存访问 v1.2

LogiCORE IP 产品指南

Vivado 设计套件

PG288（v1.2）2024年11月13日

AMD 自适应计算正在创建一个让员工、客户和合作伙伴感到受欢迎和被包容的环境。为此，我们正在从我们的产品及相关资料中删除非包容性语言。我们已经启动了一项内部计划，旨在删除可能排斥他人或强化历史偏见的语言，包括嵌入我们软件和知识产权中的术语。在我们进行这些更改并与不断发展的行业标准保持一致的过程中，你可能仍会在我们的旧产品中发现非包容性语言的例子。点击此链接了解更多信息。

AXI Multichannel Direct Memory Access v1.2

LogiCORE IP Product Guide

Vivado Design Suite

PG288 (v1.2) November 13, 2024

AMD Adaptive Computing is creating an environment where employees, customers, and partners feel welcome and included. To that end, we're removing non-inclusive language from our products and related collateral. We've launched an internal initiative to remove language that could exclude people or reinforce historical biases, including terms embedded in our software and IPs. You may still find examples of non-inclusive language in our older products as we work to make these changes and align with evolving industry standards. Follow this link for more information.

目录

第1章：简介 4
功能.4
IP 事实.5

第2章：概述 6
功能摘要.6
应用.7
许可和订购.7

第三章：P 产品规格 8
性能.9
资源利用.10
端口描述.10
寄存器空间.11
分散聚集缓冲区描述符.45
描述符管理.52
MM2S 描述符设置和 AXI4-流控制流.53
S2MM 描述符设置和 AXI 状态流.54

第4章：以核心进行设计 56
典型系统包含 AXI MCDMA.56
打卡.57
重置.58
编程顺序.58
中断.60
S2MM上的数据包丢失.61
MM2S中的队列调度器.61

第五章：设计流程步骤 65
自定义和生成核心.65
约束核心.74
模拟.75

Table of Contents

Chapter 1: Introduction 4
Features 4
IP Facts 5

Chapter 2: Overview 6
Feature Summary 6
Applications 7
Licensing and Ordering 7

Chapter 3: Product Specification 8
Performance 9
Resource Utilization 10
Port Descriptions 10
Register Space 11
Scatter Gather Buffer Descriptor 45
Descriptor Management 52
MM2S Descriptor Setting and AXI4-Stream Control Stream 53
S2MM Descriptor Setting and AXI Status Stream 54

Chapter 4: Designing with the Core 56
Typical System Comprising AXI MCDMA 56
Clocking 57
Resets 58
Programming Sequence 58
Interrupts 60
Packet Drop on S2MM 61
Queue Scheduler in MM2S 61

Chapter 5: Design Flow Steps 65
Customizing and Generating the Core 65
Constraining the Core 74
Simulation 75

综合与实现.75

第6章：示例设计.....76
实现示例设计.77
模拟示例设计.78
示例设计测试平台.78

Appen十A: 升级.....7 9

Appendix B: Debugging.....80
寻找 AMD 自适应计算解决方案的帮助.80
调试工具.81
硬件调试.82

附录C：附加资源和法律声明.....83
查找附加文档.83
支持资源.84
参考文献.84
修订历史.84
请阅读：重要法律通知.85

Synthesis and Implementation.....75

Chapter 6: Example Design.....76
Implementing the Example Design.....77
Simulating the Example Design.....78
Test Bench for the Example Design.....78

Appendix A: Upgrading.....79

Appendix B: Debugging.....80
Finding Help with AMD Adaptive Computing Solutions.....80
Debug Tools.....81
Hardware Debug.....82

Appendix C: Additional Resources and Legal Notices.....83
Finding Additional Documentation.....83
Support Resources.....84
References.....84
Revision History.....84
Please Read: Important Legal Notices.....85

第一章

介绍

AMD LogiCORETM AXI 多通道直接存储器访问（AXI MCDMA）是用于 AMD VivadoTM 设计套件的软 IP 核。AXI MCDMA 提供内存与 AXI4-Stream 目标外设之间的高带宽直接存储器访问。AXI MCDMA 核提供带有多通道支持的分散聚集（SG）接口，并且每个通道可以独立配置。

特征

- 符合AXI4标准
- AXI4 数据宽度支持 32、64、128、256、512 和 1024 位
- AXI4-Stream 数据宽度支持 8、16、32、64、128、256、512 和 1024 位
- 支持最多16个独立通道
- 支持每通道中断输出
- 支持数据重新对齐引擎（DRE）对最高512位的流数据宽度进行对齐
- 支持每个缓冲描述符 (BD) 最多 64 MB 的传输
- 可选的 AXI4-Stream 控制和状态流
- 支持单独通道重置

Chapter 1

Introduction

The AMD LogiCORE™ AXI Multichannel Direct Memory Access (AXI MCDMA) is a soft IP core for use with the AMD Vivado™ Design Suite. The AXI MCDMA provides high-bandwidth direct memory access between memory and AXI4-Stream target peripherals. The AXI MCDMA core provides Scatter Gather (SG) interface with multiple channel support with independent configuration.

Features

- AXI4-compliant
- AXI4 data width support of 32, 64, 128, 256, 512, and 1024 bits
- AXI4-Stream data width support of 8, 16, 32, 64, 128, 256, 512, and 1024 bits
- Supports up to 16 independent channels
- Supports per channel interrupt output
- Supports data realignment engine (DRE) alignment for streaming data width of up to 512 bits
- Supports up to 64 MB transfer per Buffer Descriptor (BD)
- Optional AXI4-Stream Control and Status Streams
- Supports individual channel reset

IP 事实

AMD LogiCORE™ IP 事实表	
核心细节	
支持的设备系列[1]	AMD Versal™ 自适应 SoC, AMD UltraScale+™, AMD UltraScale™, AMD Zynq™ 7000 系统单芯片，以及7系列FPGA
支持的用户界面	AXI4-Lite、AXI4-Stream、AXI4
资源	性能和资源使用网页
提供核心	
设计文件	VHDL
示例设计	VHDL
测试台	VHDL
约束文件	在 IP 生成时交付
模拟模型	源 HDL
支持的 S/W 驱动程序[2]	独立，Linux
已测试的设计流程[4]	
设计入口	AMD Vivado™ 设计套件
模拟	有关支持的模拟器，请参阅 Vivado 设计套件用户指南：版本说明，安装和许可 (UG973)。
合成	Vivado 综合
支持	
发行说明和已知问题	主答记录：69734
所有 AMD Vivado™ IP 更新日志	Master Vivado IP 更新日志：69734
支持网页	

笔记：
1. 有关支持的设备完整列表，请参阅 AMD Vivado™ IP 目录。 2. BareMetal 驱动程序支持信息可从 Baremetal <AXI MCDMA 独立> 驱动程序页面获得。 3. 有关 Linux 操作系统和驱动程序支持的信息，请参阅 AMD Wiki 页面。 4. 有关第三方工具的支持版本，请参阅 Vivado 设计套件用户指南：发行说明、安装和授权 (UG973)。

IP Facts

AMD LogiCORE™ IP Facts Table	
Core Specifics	
Supported Device Family[1]	AMD Versal™ Adaptive SoCs, AMD UltraScale+™, AMD UltraScale™, AMD Zynq™ 7000 SoC, and 7 series FPGAs
Supported User Interfaces	AXI4-Lite, AXI4-Stream, AXI4
Resources	Performance and Resource Use web page
Provided with Core	
Design Files	VHDL
Example Design	VHDL
Test Bench	VHDL
Constraints File	Delivered at the time of IP generation
Simulation Model	Source HDL
Supported S/W Driver[2]	Standalone, Linux
Tested Design Flows[4]	
Design Entry	AMD Vivado™ Design Suite
Simulation	For supported simulators, see the *Vivado Design Suite User Guide: Release Notes, Installation, and Licensing* (UG973).
Synthesis	Vivado Synthesis
Support	
Release Notes and Known Issues	Master Answer Record: 69734
All AMD Vivado™ IP Change Logs	Master Vivado IP Change Logs: 69734
Support web page	

Notes:
1. For a complete list of supported devices, see the AMD Vivado™ IP catalog.
2. BareMetal driver support information is available from the Baremetal <AXI MCDMA Standalone> Driver Page.
3. Linux OS and driver support information is available from the AMD Wiki page.
4. For the supported versions of third-party tools, see the *Vivado Design Suite User Guide: Release Notes, Installation, and Licensing* (UG973).

第二章

概览

功能摘要

- 符合AXI4标准
- 散布-收集支持：
  - 将 MCDMA 管理工作从 CPU 卸载
  - 提供独立于主数据总线的缓冲描述符（BD）的获取和更新
  - 允许描述符放置在任何内存映射位置，独立于数据缓冲区。例如，描述符可以放置在块RAM中
  - 允许每个通道拥有自己的描述符队列
- 主要 AXI4 数据宽度支持 32、64、128、256、512 和 1024 位
- DRE 支持高达 512 位的 AXI4-Stream 数据。
- 每个描述符最多可传输64 MB数据
- 可选的 AXI 控制和状态流，用于与 AXI 以太网 IP 进行接口
  - 为 MM2S 通道提供可选的控制流，为 S2MM 通道提供状态流，以将低带宽的控制和状态从高带宽的数据路径中卸载
- 在每个 MM2S 和 S2MM 路径上提供多达 16 个数据传输通道
  - 支持独立通道配置和状态
  - 支持每通道中断
- 支持按通道的分组统计，例如分组丢失和分组完成情况
- 在MM2S和S2MM端可用的功能：
  - MM2S：允许用户自定义管理缓冲区描述符
  - MM2S：在严格优先级、加权轮询（WRR）和加权路由之间选择 nd MM2S 端的 Robin-Fair 分发 (WRR-FD) 类型调度器
  - S2MM：当 MCDMA 缺少缓冲描述符或通过禁用通道丢弃数据包时，数据包会被丢弃

Chapter 2

Overview

Feature Summary

- AXI4-compliant
- Scatter-Gather support:
  - Provides offloading of MCDMA management work from the CPU
  - Provides fetch and update of Buffer Descriptors (BD) independent from primary data bus
  - Allows descriptor placement to be in any memory-mapped location, separate from data buffers. For example, descriptors can be placed in block RAM
  - Allows each channel to have its own descriptor queue
- Primary AXI4 data width support of 32, 64, 128, 256, 512, and 1024 bits
- DRE support for AXI4-Stream data with up to 512 bits.
- Up to 64 MB data transfer per descriptor
- Optional AXI Control and Status Streams to interface with the AXI Ethernet IP
  - Provides an optional control stream for the MM2S channel and a status stream for the S2MM channel to offload low-bandwidth control and status from the high-bandwidth datapath
- Provides up to 16 multiple channels of data movement on each MM2S and S2MM path
  - Supports independent channel configuration and status
  - Supports per channel interrupt
- Supports per channels packet statistics, such as packet drops and packet completions
- Features available on MM2S and S2MM side:
  - MM2S: Allows user-defined management of buffer descriptors
  - MM2S: Select between Strict Priority, Weighted Round Robin (WRR), and Weighted Round Robin-Fair Distribution (WRR-FD) types of scheduler on MM2S side
  - S2MM: Packets are dropped when MCDMA runs out of buffer descriptors or drops the packets by disabling a channel

- 支持在 MM2S 和 S2MM 上按通道进行软复位

注意：AXI MCDMA 不支持数据包交错。在数据包传输过程中，TDEST 值不能改变。

应用程序

AXI MCDMA 在系统内存和基于 AXI4-Stream 的目标 IP（例如 AXI 以太网）之间提供高速数据传输，其中数据包必须根据 TDEST 值处理到不同的描述符队列中。AXI MCDMA 也可以在系统中用来替代多个 AXI DMA 实例。

许可与订购

根据最终用户许可条款，此 AMD LogiCORE™ IP 模块可随 AMD Vivado™ 设计套件免费提供。

有关此核心的更多信息，请访问 AXI MCDMA 产品网页。

有关其他 AMD LogiCORE™ IP 模块的信息，请访问知识产权页面。如需了解其他 AMD LogiCORE IP 模块和工具的价格及供应情况，请联系当地销售代表。

- Supports soft reset per channel on MM2S and S2MM

Note: AXI MCDMA does not support packet interleaving. TDEST value cannot change in the middle of a packet transfer.

Applications

The AXI MCDMA provides high-speed data movement between system memory and an AXI4-Stream based target IP, such as AXI Ethernet, where packets have to be processed into separate descriptor queues based on the TDEST value. AXI MCDMA can also be used in systems to replace multiple instances of AXI DMA.

Licensing and Ordering

This AMD LogiCORE™ IP module is provided at no additional cost with the AMD Vivado™ Design Suite under the terms of the End User License.

For more information about this core, visit the AXI MCDMA product web page.

Information about other AMD LogiCORE™ IP modules is available at the Intellectual Property page. For information about pricing and availability of other AMD LogiCORE IP modules and tools, contact your local sales representative.

产品规格

AXI 多通道直接存储器访问 (AXI MCDMA) AMD LogiCORE™ IP 提供了 AXI4 内存映射和 AXI4-Stream IP 接口之间的高带宽直接存储器访问。其分散-聚集功能还可在基于处理器的系统中卸载中央处理单元 (CPU) 的数据移动任务。初始化、状态和管理寄存器通过 AXI4-Lite 从接口进行访问。

图 1：方框图

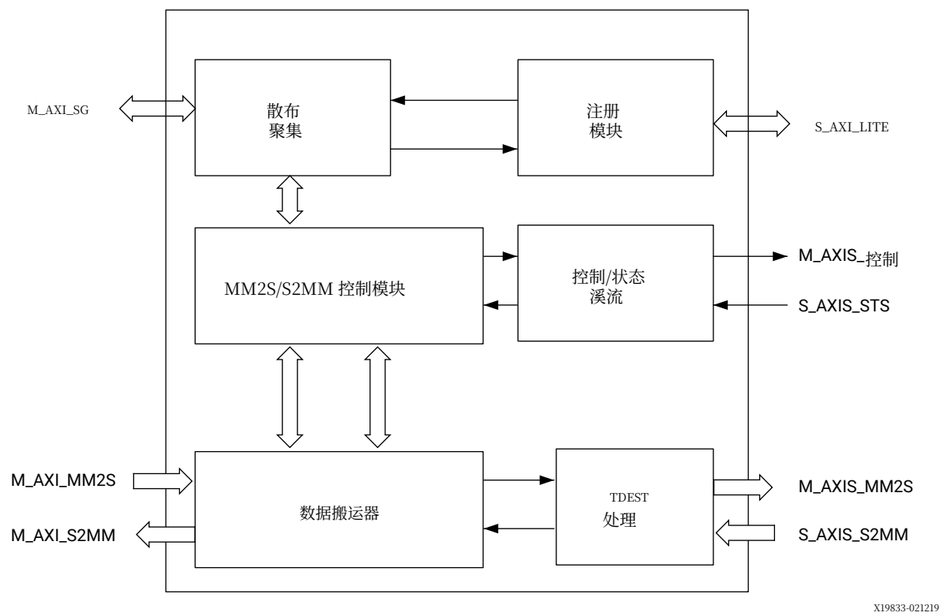

系统内存与流目标之间的主要高速数据传输是通过 AXI4 读主控到 AXI4 内存映射到流（MM2S）主控，以及 AXI4 流到内存映射（S2MM）从控到 AXI4 写主控实现的。AXI MCDMA 还支持在 MM2S 和 S2MM 路径上最多 16 个多通道数据传输。MM2S 通道和 S2MM 通道独立运行。

Product Specification

The AXI Multichannel Direct Memory Access (AXI MCDMA) (AXI MCDMA) AMD LogiCORE™ IP provides high-bandwidth direct memory access between the AXI4 memory mapped and AXI4-Stream IP interfaces. Its scatter-gather capabilities also offload data movement tasks from the central processing unit (CPU) in processor-based systems. Initialization, status, and management registers are accessed through an AXI4-Lite slave interface.

Figure 1: **Block Diagram**

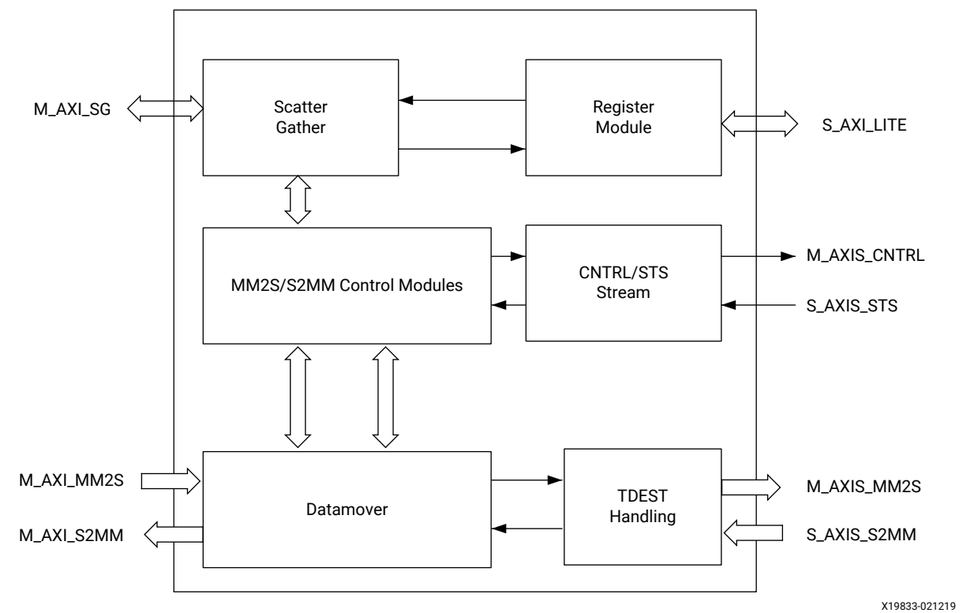

Primary high-speed data movement between the system memory and the stream target is through the AXI4 Read Master to the AXI4 memory-mapped to stream (MM2S) Master, and the AXI4-Stream to memory-mapped (S2MM) slave to the AXI4 Write master. AXI MCDMA also enables up to 16 multiple channels of data movement on both MM2S and S2MM paths. The MM2S channel and S2MM channel operate independently.

此外，AXI MCDMA 提供字节级数据重新对齐，允许从任意字节偏移位置开始进行内存读取和写入。MM2S 通道支持 AXI 控制流，用于将用户应用数据发送到目标 IP。对于 S2MM 通道，提供了 AXI 状态流，用于从目标 IP 接收用户应用数据。通道通过 AXIS 接口上的 TDEST 值进行区分。TDEST 值为零对应通道 1，TDEST 值为 15 对应通道 16。

性能

本节包含以下小节：

- 最大频率
- 延迟和吞吐量

最大频率

有关性能和资源使用的详细信息，请访问性能和资源使用网页。

延迟和吞吐量

下表提供了在同步模式下，仅 MM2S 配置的延迟数据，其中 `s_axi_lite_aclk` 以 60 MHz 运行，`s_axi_aclk` 以 100 MHz 运行。

表 1：仅 MM2S 的同步模式配置

描述	时钟周期 (s_axi_aclk)
尾描述符寄存器写入 m_axi_sg_arvalid (1)	32
从 m_axi_sg_arvalid 到 m_axi_mm2s_arvalid (2)	29
m_axi_mm2s_arvalid 到 m_axis_mm2s_有效	5

笔记：
1. 编程第一个 TD 后获取第一个描述符所需的时间。 2. 处理第一个描述符所需的时间。

下表提供了在同步模式下，仅 S2MM 配置的延迟数据，其中 `s_axi_lite_aclk` 以 60 MHz 运行，`s_axi_aclk` 以 100 MHz 运行。

表 2：仅 S2MM 配置用于同步模式

描述	时钟周期 (s_axi_aclk)
尾描述符寄存器写入到 m_axi_sg_arvalid(1)	21

Also, the AXI MCDMA provides byte-level data realignment allowing memory reads and writes starting at any byte offset location. The MM2S channel supports an AXI Control stream for sending user application data to the target IP. For the S2MM channel, an AXI Status stream is provided for receiving user application data from the target IP. The channels are differentiated with the TDEST values present on the AXIS interface. A TDEST value of zero corresponds to Channel 1, and a TDEST of 15 corresponds to Channel 16.

Performance

This section contains the following subsections:

- Maximum Frequencies
- Latency and Throughput

Maximum Frequencies

For full details about performance and resource utilization, visit the Performance and Resource Utilization web page.

Latency and Throughput

The following table provides the latency numbers for MM2S-only configuration in synchronous mode with `s_axi_lite_aclk` running at 60 MHz and `s_axi_aclk` running at 100 MHz.

Table 1: **MM2S Only Configuration For Synchronous Mode**

Description	Clocks Cycles (s_axi_aclk)
Tail Descriptor register write to m_axi_sg_arvalid (1)	32
m_axi_sg_arvalid to m_axi_mm2s_arvalid (2)	29
m_axi_mm2s_arvalid to m_axis_mm2s_tvalid	5

Notes:
1. Time taken to fetch the first descriptor after the first TD is programmed.
2. Time taken to process the first descriptor.

The following table provides the latency numbers for S2MM-only configuration for synchronous mode with `s_axi_lite_aclk` running at 60 MHz and `s_axi_aclk` running at 100 MHz.

Table 2: **S2MM Only Configuration For Synchronous Mode**

Description	Clocks Cycles (s_axi_aclk)
Tail Descriptor register write to m_axi_sg_arvalid(1)	21

表2：仅S2MM配置用于同步模式（续）

描述	时钟周期 (s_axi_aclk)
s_axis_s2mm_tvalid 对 m 有效 _axi_s2mm_awvalid[2]	35

笔记：
1. 从第一个尾部描述符（TD）被编程后到获取第一个描述符所花费的时间。
2. 接收和处理第一个数据包所需的时间。

资源利用

有关性能和资源使用的详细信息，请访问性能和资源使用网页。

端口描述

AXI 端口描述

信号名称	界面	Type	初始化值	描述
s axi aclk_ _	钟	输入		当 IP 配置时的时钟输入端口 同步模式
s axi lite aclk	钟	输入		AXI4-Lite 时钟输入端口。
m_axi_sg_aclk	钟	输入		AXI MCDMA 分散-聚集时钟。可用 仅当 IP 配置为异步模式时。
m axi mm2s aclk _ _ _	钟	输入		AXI MCDMA MM2S 主时钟。可用 当 IP 配置为异步模式时。
m axi s2mm aclk _ _ _	钟	输入		AXI MCDMA S2MM 主时钟。可用 当 IP 配置为异步模式时。
axi resetn_	重置	输入		低电平有效 AXI MCDMA 复位。被置位时 Low, 它重置 AXI MCDMA。必须进行重置 与 s_axi_lite_aclk 同步。
mm2s ch* 引入_ _	打断	输出	0	为每个 MM2S 通道中断输出。
s2mm ch* introut_ _	打断	输出	0	为每个 S2MM 通道中断输出。
AXI4-Lite接口信号				
s 轴轻型 * _ _ _	S AXI LITE_ _	输入/ 输出		请参阅 Vivado 设计套件附录 A：AXI AXI4 信号参考指南（UG1037）。
MM2S 存储器映射读取接口信号				
m axi mm2s * _ _ _	M AXI MM2S_ _	输入/ 输出		请参阅 Vivado 设计套件附录 A：AXI AXI4 信号参考指南（UG1037）。
MM2S 主流接口信号				
mm2s_主要_重置_输出_n	M AXIS MM2S_ _	输出	1	主 MM2S 重置输出。低电平有效重置
米轴 mm²/s * _ _ _	M AXIS MM2S_ _	输入/ 输出		请参阅 Vivado 设计套件的附录 A：AXI AXI4 信号参考指南（UG1037）。

Table 2: **S2MM Only Configuration For Synchronous Mode** *(cont'd)*

Description	Clocks Cycles (s_axi_aclk)
s_axis_s2mm_tvalid to m_axi_s2mm_awvalid[2]	35

Notes:
1. Time taken to fetch the first descriptor after the first Tail Descriptor (TD) is programmed.
2. Time taken to accept and process the first packet.

Resource Utilization

For full details about performance and resource utilization, visit the Performance and Resource Utilization web page.

Port Descriptions

AXI Port Descriptions

Signal Name	Interface	Type	Init Value	Description
s_axi_aclk	Clock	Input		Clock input port when the IP is configured in Sync Mode.
s_axi_lite_aclk	Clock	Input		AXI4-Lite clock input port.
m_axi_sg_aclk	Clock	Input		AXI MCDMA Scatter-Gather clock. Available only when IP is configured for Async Mode.
m_axi_mm2s_aclk	Clock	Input		AXI MCDMA MM2S Primary clock. Available when IP is configured in Async Mode.
m_axi_s2mm_aclk	Clock	Input		AXI MCDMA S2MM Primary clock. Available when IP is configured in Async Mode.
axi_resetn	Reset	Input		Active-Low AXI MCDMA reset. When asserted Low, it resets the AXI MCDMA. The reset must be synchronous to s_axi_lite_aclk.
mm2s_ch*_introut	Interrupt	Output	0	Interrupt out for each MM2S channel.
s2mm_ch*_introut	Interrupt	Output	0	Interrupt out for each S2MM channel.
AXI4-Lite Interface Signals				
s_axi_lite_*	S_AXI_LITE	Input/ Output		See Appendix A of the *Vivado Design Suite: AXI Reference Guide* (UG1037) for the AXI4 signal.
MM2S Memory Map Read Interface Signals				
m_axi_mm2s_*	M_AXI_MM2S	Input/ Output		See Appendix A of the *Vivado Design Suite: AXI Reference Guide* (UG1037) for the AXI4 signal.
MM2S Master Stream Interface Signals				
mm2s_prmry_reset_out_n	M_AXIS_MM2S	Output	1	Primary MM2S Reset Out. Active-Low reset
m_axis_mm2s_*	M_AXIS_MM2S	Input/ Output		See Appendix A of the *Vivado Design Suite: AXI Reference Guide* (UG1037) for the AXI4 signal.

信号名称	接口	Type	初始化值	描述
MM2S 主控流接口信号				
mm2s 控制复位输出 n_ _ _ _	M AXIS CNTRL_ _	输出	1	控制复位输出。低电平有效复位
m 轴 mm2s 控制 * _ _ _ _	M AXIS CNTRL_ _	输入/输出		请参阅 Vivado 设计套件附录 A：AXI AXI4 信号参考指南（UG1037）。
S2MM 存储映射读取接口信号				
m axi s2mm * _ _ _	M AXI S2MM_ _	输入/输出		请参阅 Vivado 设计套件附录 A：AXI AXI4 信号参考指南（UG1037）。
S2MM从属流接口信号				
s2mm_主要_重置_输出_n	S轴 S2MM_ _	输出	1	主 S2MM 重置输出。低电平有效重置
s轴 s2mm * _ _ _	S 轴 SMM_ _	输入/输出		请参阅 Vivado 设计套件附录 A：AXI AXI4 信号参考指南（UG1037）。
S2MM 从属状态流接口信号				
s2mm sts 重置输出 n_ _ _ _	S 轴 STS_ _	输出	1	控制复位输出。低电平有效复位
s 轴 s2mm sts * _ _ _ _	S 轴 STS_ _	输入/输出		请参阅 Vivado 设计套件附录 A：AXI AXI4 信号参考指南（UG1037）。
散点聚集内存映射接口信号				
m_axi_sg_*	M AXI SG_ _	输入/输出		请参阅 Vivado 设计套件附录 A：AXI AXI4 信号参考指南（UG1037）。
mm2s_主要_重置_输出_百分比 h_n[NUM_MM2S_通道 -1:0]	M AXIS MM2S_ _	输出	1	每个通道生成的 MM2S 重置信号。低电平复位。软复位时可用每个通道参数已启用
s2mm_主要_重置_输出_百分比 h_n[NUM_S2MM_通道 -1:0]	S轴 S2MM_ _	输出	1	S2MM 为每个通道生成重置信号。低电平复位。软复位时可用每个通道参数已启用

注册空间

MM2S AXI MCDMA 核心寄存器空间如下表所示。

注意：AXI4-Lite 写访问寄存器由 32 位 AXI 写数据 (`*_wdata`) 信号更新，不受 AXI 写数据选通信号 (`*_wstrb`) 的影响。对于写操作，AXI 写地址有效 (`*_awvalid`) 和 AXI 写数据有效 (`*_wvalid`) 信号应同时被置位。

Signal Name	Interface	Type	Init Value	Description
MM2S Master Control Stream Interface Signals				
mm2s_cntrl_reset_out_n	M_AXIS_CNTRL	Output	1	Control Reset Out. Active-Low reset
m_axis_mm2s_cntrl_*	M_AXIS_CNTRL	Input/Output		See Appendix A of the *Vivado Design Suite: AXI Reference Guide* (UG1037) for the AXI4 signal.
S2MM Memory Map Read Interface Signals				
m_axi_s2mm_*	M_AXI_S2MM	Input/Output		See Appendix A of the *Vivado Design Suite: AXI Reference Guide* (UG1037) for the AXI4 signal.
S2MM Slave Stream Interface Signals				
s2mm_prmry_reset_out_n	S_AXIS_S2MM	Output	1	Primary S2MM Reset Out. Active-Low reset
s_axis_s2mm_*	S_AXIS_SMM	Input/Output		See Appendix A of the *Vivado Design Suite: AXI Reference Guide* (UG1037) for the AXI4 signal.
S2MM Slave Status Stream Interface Signals				
s2mm_sts_reset_out_n	S_AXIS_STS	Output	1	Control Reset Out. Active-Low reset
s_axis_s2mm_sts_*	S_AXIS_STS	Input/Output		See Appendix A of the *Vivado Design Suite: AXI Reference Guide* (UG1037) for the AXI4 signal.
Scatter Gather Memory Map Interface Signals				
m_axi_sg_*	M_AXI_SG	Input/Output		See Appendix A of the *Vivado Design Suite: AXI Reference Guide* (UG1037) for the AXI4 signal.
mm2s_prmry_reset_out_perch_n[NUM_MM2S_CHANNELS -1:0]	M_AXIS_MM2S	Output	1	MM2S generated reset out per channel. Active-Low reset. Available when soft reset per channel parameter is enabled
s2mm_prmry_reset_out_perch_n[NUM_S2MM_CHANNELS -1:0]	S_AXIS_S2MM	Output	1	S2MM generated reset out per channel. Active-Low reset. Available when soft reset per channel parameter is enabled

Register Space

The MM2S AXI MCDMA core register space is shown in the following table.

Note: The AXI4-Lite write access register is updated by the 32-bit AXI Write Data (`*_wdata`) signal, and is not impacted by the AXI Write Data Strobe (`*_wstrb`) signal. For a write, both the AXI Write Address Valid (`*_awvalid`) and AXI Write Data Valid (`*_wvalid`) signals should be asserted simultaneously.

表 3：AXI MCDMA 核心寄存器空间（MM2S）

	寄存器偏移	Name	注册说明
常见 MM2S 寄存器	0x000	MM2S CCR_	通用控制寄存器
	0x004	MM2S CSR_	通用状态寄存器
	0x008	MM2S 陈_	通道启用/禁用
	0x00C	MM2S CHSER_	通道进行注册
	0x010	MM2S 错误_	错误寄存器
	0x014	MM2S CH SCHD 类型_ _ _	通道队列调度类型
	0x018	MM2S WRR REG1_ _	每个通道的权重（CH1-8）
	0x1C	MM2S WRR REG2_ _	每个通道的重量（CH9-16）
	0x020	MM2S 通道服务_ _	MM2S通道完成寄存器
	0x024	MM2S_ARCACHE _ARUSER	为...设置 ARCACHE 和 ARUSER 值 AXI4 读取
	0x028	MM2S 中断状态_ _	MM2S通道中断监视器 注册
	0x02C-0x03C		RSVD
频道 1	0x040	MM2S CH1CR_	CH1 控制寄存器
	0x044	MM2S CH1SR_	CH1 状态寄存器
	0x048	MM2S CH1CURDESC LSB_ _	CH1 电流描述符（LSB）
	0x04C	MM2S CH1CURDESC MSB_ _	CH1 电流描述符（最高有效字节）
	0x050	MM2S CH1尾部描述 LSB_ _	CH1 尾描述符（LSB）
	0x054	MM2S CH1尾部描述 MSB_ _	CH1 尾描述符（最高有效字节）
	0x058	MM2S_CH1包计数 _STAT	CH1 数据包处理计数
	0x05C-0x07C		RSVD
频道2	0x080	MM2S CH2CR_	CH2 控制寄存器
	0x084	MM2S CH2SR_	CH2 状态寄存器
	0x088	MM2S CH2CURDESC LSB_ _	CH2 电流描述符（LSB）
	0x08C	MM2S CH2CURDESC MSB_ _	CH2 当前描述符（最高有效位）
	0x090	MM2S CH2尾部描述 LSB_ _	CH2 尾描述符（LSB）
	0x094	MM2S CH2尾部描述 MSB_ _	CH2 尾描述符（最高有效位）
	0x098	MM2S_CH2包计数 _STAT	CH2 数据包处理计数
	0x09C-0x0BC		RSVD
频道3	0x0C0	MM2S CH3CR_	CH3 控制寄存器
	0x0C4	MM2S CH3SR_	CH3 状态寄存器
	0x0C8	MM2S CH3CURDESC LSB_ _	CH3 电流描述符（LSB）
	0x0CC	MM2S CH3CURDESC MSB_ _	CH3 电流描述符（最高有效位）
	0x0D0	MM2S CH3TAILDESC LSB_ _	CH3 尾部描述符（LSB）
	0x0D4	MM2S CH3尾部描述 MSB_ _	CH3 尾部描述符（最高有效位）
	0x0D8	MM2S_CH3PKTCOUNT _STAT	CH3 数据包处理计数
	0x0DC-0x0FC		RSVD

Table 3: **AXI MCDMA Core Register Space (MM2S)**

	Reg Offset	Name	Reg Description
Common MM2S Registers	0x000	MM2S_CCR	Common Control Register
	0x004	MM2S_CSR	Common Status Register
	0x008	MM2S_CHEN	Channel Enable/Disable
	0x00C	MM2S_CHSER	Channel In Progress Register
	0x010	MM2S_ERR	Error Register
	0x014	MM2S_CH_SCHD_TYPE	Channel Queue Scheduler type
	0x018	MM2S_WRR_REG1	Weight of each channel (CH1-8)
	0x1C	MM2S_WRR_REG2	Weight of each channel (CH9-16)
	0x020	MM2S_CHANNELS_SERVICED	MM2S Channels Completed Register
	0x024	MM2S_ARCACHE_ARUSER	Set the ARCACHE and ARUSER values for AXI4 read
	0x028	MM2S_INTR_STATUS	MM2S Channel Interrupt Monitor Register
	0x02C-0x03C		RSVD
Channel 1	0x040	MM2S_CH1CR	CH1 Control Register
	0x044	MM2S_CH1SR	CH1 Status Register
	0x048	MM2S_CH1CURDESC_LSB	CH1 Current Descriptor (LSB)
	0x04C	MM2S_CH1CURDESC_MSB	CH1 Current Descriptor (MSB)
	0x050	MM2S_CH1TAILDESC_LSB	CH1 Tail Descriptor (LSB)
	0x054	MM2S_CH1TAILDESC_MSB	CH1 Tail Descriptor (MSB)
	0x058	MM2S_CH1PKTCOUNT_STAT	CH1 Packet Processed count
	0x05C-0x07C		RSVD
Channel 2	0x080	MM2S_CH2CR	CH2 Control Register
	0x084	MM2S_CH2SR	CH2 Status Register
	0x088	MM2S_CH2CURDESC_LSB	CH2 Current Descriptor (LSB)
	0x08C	MM2S_CH2CURDESC_MSB	CH2 Current Descriptor (MSB)
	0x090	MM2S_CH2TAILDESC_LSB	CH2 Tail Descriptor (LSB)
	0x094	MM2S_CH2TAILDESC_MSB	CH2 Tail Descriptor (MSB)
	0x098	MM2S_CH2PKTCOUNT_STAT	CH2 Packet Processed count
	0x09C-0x0BC		RSVD
Channel 3	0x0C0	MM2S_CH3CR	CH3 Control Register
	0x0C4	MM2S_CH3SR	CH3 Status Register
	0x0C8	MM2S_CH3CURDESC_LSB	CH3 Current Descriptor (LSB)
	0x0CC	MM2S_CH3CURDESC_MSB	CH3 Current Descriptor (MSB)
	0x0D0	MM2S_CH3TAILDESC_LSB	CH3 Tail Descriptor (LSB)
	0x0D4	MM2S_CH3TAILDESC_MSB	CH3 Tail Descriptor (MSB)
	0x0D8	MM2S_CH3PKTCOUNT_STAT	CH3 Packet Processed count
	0x0DC-0x0FC		RSVD

表3：AXI MCDMA 核心寄存器空间（MM2S）（续）

	寄存器偏移	Name	注册说明
第四频道	0x100	MM2S CH4CR_	CH4 控制寄存器
	0x104	MM2S CH4SR_	CH4 状态寄存器
	0x108	MM2S CH4CURDESC LSB_	CH4 电流描述符（LSB）
	0x10C	MM2S CH4CURDESC MSB_	CH4 当前描述符（最高有效位）
	0x110	MM2S CH4TAILDESC LSB_	CH4 尾描述符（LSB）
	0x114	MM2S CH4尾部描述 MSB_	CH4 尾描述符（最高有效位）
	0x118	MM2S_CH4包计数_STAT	CH4 数据包处理计数
	0x11C-0x13C		RSVD
第五频道	0x140	MM2S CH5CR_	CH5 控制寄存器
	0x144	MM2S CH5SR_	CH5 状态寄存器
	0x148	MM2S CH5CURDESC LSB_	CH5 电流描述符（LSB）
	0x14C	MM2S CH5CURDESC MSB_	CH5 电流描述符（最高有效位）
	0x150	MM2S CH5尾部描述 LSB_	CH5 尾描述符（LSB）
	0x154	MM2S CH5尾部描述 MSB_	CH5 尾描述符（最高有效位）
	0x158	MM2S_CH5数据包计数_STAT	CH5 数据包处理计数
	0x15C-0x17C		RSVD
第六频道	0x180	MM2S CH6CR_	CH6 控制寄存器
	0x184	MM2S CH6SR_	CH6 状态寄存器
	0x188	MM2S CH6CURDESC LSB_	CH6 电流描述符（LSB）
	0x18C	MM2S CH6CURDESC MSB_	CH6 电流描述符（最高有效位）
	0x190	MM2S CH6尾部描述 LSB_	CH6 尾描述符（LSB）
	0x194	MM2S CH6TAILDESC MSB	CH6 尾描述符（最高有效字节）
	0x198	MM2S_CH6数据包计数_STAT	CH6 数据包处理计数
	0x19C-0x1BC		RSVD
第7频道	0x1C0	MM2S CH7CR_	CH7 控制寄存器
	0x1C4	MM2S CH7SR_	CH7 状态寄存器
	0x1C8	MM2S CH7CURDESC LSB_	CH7 电流描述符（LSB）
	0x1CC	MM2S CH7CURDESC MSB_	CH7 电流描述符（最高有效位）
	0x1D0	MM2S CH7尾部描述 LSB_	CH7 尾描述符（LSB）
	0x1D4	MM2S CH7尾部描述 MSB_	CH7 尾描述符（最高有效字节）
	0x1D8	MM2S_CH7数据包计数_STAT	CH7 数据包处理计数
	0x1DC-0x1FC		RSVD

Table 3: **AXI MCDMA Core Register Space (MM2S)** *(cont'd)*

	Reg Offset	Name	Reg Description
Channel 4	0x100	MM2S_CH4CR	CH4 Control Register
	0x104	MM2S_CH4SR	CH4 Status Register
	0x108	MM2S_CH4CURDESC_LSB	CH4 Current Descriptor (LSB)
	0x10C	MM2S_CH4CURDESC_MSB	CH4 Current Descriptor (MSB)
	0x110	MM2S_CH4TAILDESC_LSB	CH4 Tail Descriptor (LSB)
	0x114	MM2S_CH4TAILDESC_MSB	CH4 Tail Descriptor (MSB)
	0x118	MM2S_CH4PKTCOUNT_STAT	CH4 Packet Processed count
	0x11C-0x13C		RSVD
Channel 5	0x140	MM2S_CH5CR	CH5 Control Register
	0x144	MM2S_CH5SR	CH5 Status Register
	0x148	MM2S_CH5CURDESC_LSB	CH5 Current Descriptor (LSB)
	0x14C	MM2S_CH5CURDESC_MSB	CH5 Current Descriptor (MSB)
	0x150	MM2S_CH5TAILDESC_LSB	CH5 Tail Descriptor (LSB)
	0x154	MM2S_CH5TAILDESC_MSB	CH5 Tail Descriptor (MSB)
	0x158	MM2S_CH5PKTCOUNT_STAT	CH5 Packet Processed count
	0x15C-0x17C		RSVD
Channel 6	0x180	MM2S_CH6CR	CH6 Control Register
	0x184	MM2S_CH6SR	CH6 Status Register
	0x188	MM2S_CH6CURDESC_LSB	CH6 Current Descriptor (LSB)
	0x18C	MM2S_CH6CURDESC_MSB	CH6 Current Descriptor (MSB)
	0x190	MM2S_CH6TAILDESC_LSB	CH6 Tail Descriptor (LSB)
	0x194	MM2S_CH6TAILDESC_MSB	CH6 Tail Descriptor (MSB)
	0x198	MM2S_CH6PKTCOUNT_STAT	CH6 Packet Processed count
	0x19C-0x1BC		RSVD
Channel 7	0x1C0	MM2S_CH7CR	CH7 Control Register
	0x1C4	MM2S_CH7SR	CH7 Status Register
	0x1C8	MM2S_CH7CURDESC_LSB	CH7 Current Descriptor (LSB)
	0x1CC	MM2S_CH7CURDESC_MSB	CH7 Current Descriptor (MSB)
	0x1D0	MM2S_CH7TAILDESC_LSB	CH7 Tail Descriptor (LSB)
	0x1D4	MM2S_CH7TAILDESC_MSB	CH7 Tail Descriptor (MSB)
	0x1D8	MM2S_CH7PKTCOUNT_STAT	CH7 Packet Processed count
	0x1DC-0x1FC		RSVD

表3：AXI MCDMA 核心寄存器空间（MM2S）（续）

	寄存器偏移	Name	注册说明
第8频道	0x200	MM2S CH8CR_	CH8 控制寄存器
	0x204	MM2S CH8SR_	CH8 状态寄存器
	0x208	MM2S CH8CURDESC LSB_ –	CH8 电流描述符（LSB）
	0x20C	MM2S CH8CURDESC MSB_ –	CH8 电流描述符（最高有效字节）
	0x210	MM2S CH8TAILDESC LSB_ –	CH8 尾描述符（LSB）
	0x214	MM2S CH8尾部描述 MSB_ –	CH8 尾描述符（最高有效位）
	0x218	MM2S_CH8数据包计数_STAT	CH8 数据包处理计数
	0x21C-0x23C		RSVD
第九频道	0x240	MM2S CH9CR_	CH9 控制寄存器
	0x244	MM2S CH9SR_	CH9 状态寄存器
	0x248	MM2S CH9CURDESC LSB_ –	CH9 当前描述符（最低有效字节）
	0x24C	MM2S CH9CURDESC MSB_ –	CH9 当前描述符（MSB）
	0x250	MM2S CH9尾部描述 LSB_ –	CH9 尾描述符（LSB）
	0x254	MM2S CH9尾部描述 MSB_ –	CH9 尾描述符（最高有效位）
	0x258	MM2S_CH9数据包计数_STAT	CH9 数据包处理计数
	0x25C-0x27C		RSVD
频道10	0x280	MM2S CH10CR_	CH10 控制寄存器
	0x284	MM2S CH10SR_	CH10 状态寄存器
	0x288	MM2S CH10CURDESC LSB_ –	CH10 当前描述符（最低有效位）
	0x28C	MM2S CH10CURDESC MSB_ –	CH10 电流描述符（最高有效位）
	0x290	MM2S CH10尾部描述 LSB_ –	CH10 尾描述符（LSB）
	0x294	MM2S CH10尾部描述 MSB_ –	CH10 尾描述符（最高有效字节）
	0x298	MM2S_CH10数据包计数_STAT	CH10 数据包处理计数
	0x29C-0x2BC		RSVD
频道11	0x2C0	MM2S CH11CR_	CH11 控制寄存器
	0x2C4	MM2S CH11SR_	CH11 状态寄存器
	0x2C8	MM2S CH11CURDESC LSB_ –	CH11 当前描述符（最低有效位）
	0x2CC	MM2S CH11CURDESC MSB_ –	CH11 当前描述符（MSB）
	0x2D0	MM2S CH11尾部描述 LSB_ –	CH11 尾描述符（LSB）
	0x2D4	MM2S CH11尾部描述 MSB_ –	CH11 尾描述符（最高有效位）
	0x2D8	MM2S_CH11数据包计数_STAT	CH11 数据包处理计数
	0x2DC-0x2FC		RSVD

Table 3: **AXI MCDMA Core Register Space (MM2S)** *(cont'd)*

	Reg Offset	Name	Reg Description
Channel 8	0x200	MM2S_CH8CR	CH8 Control Register
	0x204	MM2S_CH8SR	CH8 Status Register
	0x208	MM2S_CH8CURDESC_LSB	CH8 Current Descriptor (LSB)
	0x20C	MM2S_CH8CURDESC_MSB	CH8 Current Descriptor (MSB)
	0x210	MM2S_CH8TAILDESC_LSB	CH8 Tail Descriptor (LSB)
	0x214	MM2S_CH8TAILDESC_MSB	CH8 Tail Descriptor (MSB)
	0x218	MM2S_CH8PKTCOUNT_STAT	CH8 Packet Processed count
	0x21C-0x23C		RSVD
Channel 9	0x240	MM2S_CH9CR	CH9 Control Register
	0x244	MM2S_CH9SR	CH9 Status Register
	0x248	MM2S_CH9CURDESC_LSB	CH9 Current Descriptor (LSB)
	0x24C	MM2S_CH9CURDESC_MSB	CH9 Current Descriptor (MSB)
	0x250	MM2S_CH9TAILDESC_LSB	CH9 Tail Descriptor (LSB)
	0x254	MM2S_CH9TAILDESC_MSB	CH9 Tail Descriptor (MSB)
	0x258	MM2S_CH9PKTCOUNT_STAT	CH9 Packet Processed count
	0x25C-0x27C		RSVD
Channel 10	0x280	MM2S_CH10CR	CH10 Control Register
	0x284	MM2S_CH10SR	CH10 Status Register
	0x288	MM2S_CH10CURDESC_LSB	CH10 Current Descriptor (LSB)
	0x28C	MM2S_CH10CURDESC_MSB	CH10 Current Descriptor (MSB)
	0x290	MM2S_CH10TAILDESC_LSB	CH10 Tail Descriptor (LSB)
	0x294	MM2S_CH10TAILDESC_MSB	CH10 Tail Descriptor (MSB)
	0x298	MM2S_CH10PKTCOUNT_STAT	CH10 Packet Processed count
	0x29C-0x2BC		RSVD
Channel 11	0x2C0	MM2S_CH11CR	CH11 Control Register
	0x2C4	MM2S_CH11SR	CH11 Status Register
	0x2C8	MM2S_CH11CURDESC_LSB	CH11 Current Descriptor (LSB)
	0x2CC	MM2S_CH11CURDESC_MSB	CH11 Current Descriptor (MSB)
	0x2D0	MM2S_CH11TAILDESC_LSB	CH11 Tail Descriptor (LSB)
	0x2D4	MM2S_CH11TAILDESC_MSB	CH11 Tail Descriptor (MSB)
	0x2D8	MM2S_CH11PKTCOUNT_STAT	CH11 Packet Processed count
	0x2DC-0x2FC		RSVD

表3：AXI MCDMA 核心寄存器空间（MM2S）（续）

	寄存器偏移	Name	注册说明
第12频道	0x300	MM2S CH12CR_	CH12 控制寄存器
	0x304	MM2S CH12SR_	CH12 状态寄存器
	0x308	MM2S CH12CURDESC LSB_ -	CH12 电流描述符（LSB）
	0x30C	MM2S CH12CURDESC MSB_ -	CH12 电流描述符（MSB）
	0x310	MM2S CH12尾部描述 LSB_ -	CH12 尾描述符（LSB）
	0x314	MM2S CH12尾部描述 MSB_ -	CH12 尾描述符（最高有效位）
	0x318	MM2S_CH12数据包计数_STAT	CH12 数据包处理计数
	0x31C-0x33C		RSVD
频道13	0x340	MM2S CH13CR_	CH13 控制寄存器
	0x344	MM2S CH13SR_	CH13 状态寄存器
	0x348	MM2S CH13CURDESC LSB_ -	CH13 当前描述符（最低有效位）
	0x34C	MM2S CH13CURDESC MSB_ -	CH13 当前描述符（MSB）
	0x350	MM2S CH13尾部描述 LSB_ -	CH13 尾描述符（LSB）
	0x354	MM2S CH13尾部描述 MSB_ -	CH13 尾描述符（最高有效字节）
	0x358	MM2S_CH13数据包计数_STAT	CH13 数据包处理计数
	0x35C-0x37C		RSVD
频道14	0x380	MM2S CH14CR_	CH14 控制寄存器
	0x384	MM2S CH14SR_	CH14 状态寄存器
	0x388	MM2S CH14CURDESC LSB_ -	CH14 当前描述符 (LSB)
	0x38C	MM2S CH14CURDESC MSB_ -	CH14 当前描述符（MSB）
	0x390	MM2S CH14尾部描述 LSB_ -	CH14 尾描述符（LSB）
	0x394	MM2S CH14尾部描述 MSB_ -	CH14 尾描述符（最高有效位）
	0x398	MM2S_CH14数据包计数_STAT	CH14 数据包处理计数
	0x39C-0x3BC		RSVD
频道15	0x3C0	MM2S CH15CR_	CH15 控制寄存器
	0x3C4	MM2S CH15SR_	CH15 状态寄存器
	0x3C8	MM2S CH15CURDESC LSB_ -	CH15 当前描述符（最低有效位）
	0x3CC	MM2S CH15CURDESC MSB_ -	CH15 当前描述符（MSB）
	0x3D0	MM2S CH15尾部描述 LSB_ -	CH15 尾描述符（LSB）
	0x3D4	MM2S CH15尾部描述 MSB_ -	CH15 尾描述符（最高有效位）
	0x3D8	MM2S_CH15数据包计数_STAT	CH15 数据包处理计数
	0x3DC-0x3FC		RSVD

Table 3: **AXI MCDMA Core Register Space (MM2S)** *(cont'd)*

	Reg Offset	Name	Reg Description
Channel 12	0x300	MM2S_CH12CR	CH12 Control Register
	0x304	MM2S_CH12SR	CH12 Status Register
	0x308	MM2S_CH12CURDESC_LSB	CH12 Current Descriptor (LSB)
	0x30C	MM2S_CH12CURDESC_MSB	CH12 Current Descriptor (MSB)
	0x310	MM2S_CH12TAILDESC_LSB	CH12 Tail Descriptor (LSB)
	0x314	MM2S_CH12TAILDESC_MSB	CH12 Tail Descriptor (MSB)
	0x318	MM2S_CH12PKTCOUNT_STAT	CH12 Packet Processed count
	0x31C-0x33C		RSVD
Channel 13	0x340	MM2S_CH13CR	CH13 Control Register
	0x344	MM2S_CH13SR	CH13 Status Register
	0x348	MM2S_CH13CURDESC_LSB	CH13 Current Descriptor (LSB)
	0x34C	MM2S_CH13CURDESC_MSB	CH13 Current Descriptor (MSB)
	0x350	MM2S_CH13TAILDESC_LSB	CH13 Tail Descriptor (LSB)
	0x354	MM2S_CH13TAILDESC_MSB	CH13 Tail Descriptor (MSB)
	0x358	MM2S_CH13PKTCOUNT_STAT	CH13 Packet Processed count
	0x35C-0x37C		RSVD
Channel 14	0x380	MM2S_CH14CR	CH14 Control Register
	0x384	MM2S_CH14SR	CH14 Status Register
	0x388	MM2S_CH14CURDESC_LSB	CH14 Current Descriptor (LSB)
	0x38C	MM2S_CH14CURDESC_MSB	CH14 Current Descriptor (MSB)
	0x390	MM2S_CH14TAILDESC_LSB	CH14 Tail Descriptor (LSB)
	0x394	MM2S_CH14TAILDESC_MSB	CH14 Tail Descriptor (MSB)
	0x398	MM2S_CH14PKTCOUNT_STAT	CH14 Packet Processed count
	0x39C-0x3BC		RSVD
Channel 15	0x3C0	MM2S_CH15CR	CH15 Control Register
	0x3C4	MM2S_CH15SR	CH15 Status Register
	0x3C8	MM2S_CH15CURDESC_LSB	CH15 Current Descriptor (LSB)
	0x3CC	MM2S_CH15CURDESC_MSB	CH15 Current Descriptor (MSB)
	0x3D0	MM2S_CH15TAILDESC_LSB	CH15 Tail Descriptor (LSB)
	0x3D4	MM2S_CH15TAILDESC_MSB	CH15 Tail Descriptor (MSB)
	0x3D8	MM2S_CH15PKTCOUNT_STAT	CH15 Packet Processed count
	0x3DC-0x3FC		RSVD

表3：AXI MCDMA 核心寄存器空间（MM2S）（续）

	寄存器偏移	Name	注册说明
频道16	0x400	MM2S CH16CR_	CH16 控制寄存器
	0x404	MM2S CH16SR_	CH16 状态寄存器
	0x408	MM2S CH16CURDESC LSB_ –	CH16 当前描述符（最低有效位）
	0x40C	MM2S CH16CURDESC MSB_ –	CH16 电流描述符（最高有效位）
	0x410	MM2S CH16TAILDESC LSB_ –	CH16 尾描述符（LSB）
	0x414	MM2S CH16尾部描述 MSB_ –	CH16 尾描述符（最高有效位）
	0x418	MM2S_CH16数据包计数_STAT	CH16 数据包处理计数
	0x41C-0x43C		RSVD
频道组	0x440	MM2S通道观察器1	频道服务信息 在 AMD VivadoTMTM 中选择的通道 集成设计环境 (IDE) 在第一组下
	0x444	MM2S通道观察器2	频道服务信息 在 Vivado IDE 中选择的通道 第二组
	0x448	MM2S通道观察器3	频道服务信息 在 Vivado IDE 中选择的通道 第三组
	0x44C	MM2S通道观察器4	频道服务信息 在 Vivado IDE 中选择的通道 第四组
	0x450	MM2S通道观察器5	频道服务信息 在 Vivado IDE 中选择的通道 第五组
	0x454	MM2S通道观察器6	频道服务信息 在 Vivado IDE 中选择的通道 第六组

S2MM AXI MCDMA 核心寄存器空间如下表所示。

表 4：AXI MCDMA 核心寄存器空间（S2MM）

	寄存器偏移	Name	寄存器描述
常见 S2MM 寄存器	0x500	S2MM CCR_	通用控制寄存器
	0x504	S2MM 客户服务_	通用状态寄存器
	0x508	S2MM 陈_	通道启用/禁用
	0x50C	S2MM CHSER_	通道进行注册
	0x510	S2MM 错误_	MCDMA 错误寄存器
	0x514	S2MM PKTDROP_	S2MM 数据包丢失统计
	0x518	S2MM_ 频道_服务 S2MM 频道已完成注册	
	0x51C	S2MM_AWCACHE _AWUSER	设置 awcache 和 awuser 的值 港口
	0x520	S2MM 中断状态_ _	S2MM通道中断监视器 注册
	0x524-0x53C		RSVD

Table 3: **AXI MCDMA Core Register Space (MM2S)** *(cont'd)*

	Reg Offset	Name	Reg Description
Channel 16	0x400	MM2S_CH16CR	CH16 Control Register
	0x404	MM2S_CH16SR	CH16 Status Register
	0x408	MM2S_CH16CURDESC_LSB	CH16 Current Descriptor (LSB)
	0x40C	MM2S_CH16CURDESC_MSB	CH16 Current Descriptor (MSB)
	0x410	MM2S_CH16TAILDESC_LSB	CH16 Tail Descriptor (LSB)
	0x414	MM2S_CH16TAILDESC_MSB	CH16 Tail Descriptor (MSB)
	0x418	MM2S_CH16PKTCOUNT_STAT	CH16 Packet Processed count
	0x41C-0x43C		RSVD
Channel Groups	0x440	MM2S Channel Observer 1	Channel service information for the channels selected in AMD Vivado™™ Integrated Design Environment (IDE) under Group 1
	0x444	MM2S Channel Observer 2	Channel service information for the channels selected in Vivado IDE under Group 2
	0x448	MM2S Channel Observer 3	Channel service information for the channels selected in Vivado IDE under Group 3
	0x44C	MM2S Channel Observer 4	Channel service information for the channels selected in Vivado IDE under Group 4
	0x450	MM2S Channel Observer 5	Channel service information for the channels selected in Vivado IDE under Group 5
	0x454	MM2S Channel Observer 6	Channel service information for the channels selected in Vivado IDE under Group 6

The S2MM AXI MCDMA core register space is shown in the following table.

Table 4: **AXI MCDMA Core Register Space (S2MM)**

	Register Offset	Name	Register Description
Common S2MM Registers	0x500	S2MM_CCR	Common Control Register
	0x504	S2MM_CSR	Common Status Register
	0x508	S2MM_CHEN	Channel Enable/Disable
	0x50C	S2MM_CHSER	Channel In Progress Register
	0x510	S2MM_ERR	MCDMA Error Register
	0x514	S2MM_PKTDROP	S2MM Packet Drop Stat
	0x518	S2MM_ CHANNELS_SERVICED	S2MM Channels Completed Register
	0x51C	S2MM_AWCACHE_AWUSER	Set the values for awcache and awuser ports
	0x520	S2MM_INTR_STATUS	S2MM Channel Interrupt Monitor Register
	0x524-0x53C		RSVD

表 4：AXI MCDMA 核心寄存器空间（S2MM）（续）

	寄存器偏移	Name	寄存器描述
频道 1	0x540	S2MM CH1CR_	CH1 控制寄存器
	0x544	S2MM CH1SR_	CH1 状态寄存器
	0x548	S2MM CH1CURDESC LSB_	CH1 电流描述符（LSB）
	0x54C	S2MM CH1CURDESC MSB_	CH1 电流描述符（最高有效字节）
	0x550	S2MM CH1尾部描述 LSB_	CH1 尾描述符（LSB）
	0x554	S2MM CH1尾部描述 MSB_	CH1 尾描述符（最高有效字节）
	0x558	S2MM CH1PKTDROP 状态_	CH1 数据包丢失统计
	0x55C	S2MM_CH1包计数_STAT	CH1 数据包处理计数
	0x560-0x57C		RSVD
频道2	0x580	S2MM CH2CR_	CH2 控制寄存器
	0x584	S2MM CH2SR_	CH2 状态寄存器
	0x588	S2MM CH2CURDESC LSB_	CH2 电流描述符（LSB）
	0x58C	S2MM CH2CURDESC MSB_	CH2 电流描述符（最高有效位）
	0x590	S2MM CH2尾部描述 LSB_	CH2 尾描述符（LSB）
	0x594	S2MM CH2尾部描述 MSB_	CH2 尾描述符（最高有效位）
	0x598	S2MM CH2PKTDROP STAT	CH2 数据包丢失统计
	0x59C	S2MM_CH2包计数_STAT	CH2 数据包处理计数
	0x5A0-0x5BC		RSVD
频道3	0x5C0	S2MM CH3CR_	CH3 控制寄存器
	0x5C4	S2MM CH3SR_	CH3 状态寄存器
	0x5C8	S2MM CH3CURDESC LSB_	CH3 电流描述符（LSB）
	0x5CC	S2MM CH3CURDESC MSB_	CH3 电流描述符（最高有效位）
	0x5D0	S2MM CH3尾部描述 LSB_	CH3 尾部描述符（LSB）
	0x5D4	S2MM CH3TAILDESC MSB_	CH3 尾部描述符（最高有效位）
	0x5D8	S2MM CH3PKTDROP STAT	CH3 数据包丢失统计
	0x5DC	S2MM_CH3PKTCOUNT_STAT	CH3 数据包处理计数
	0x5E0-0x5FC		RSVD
第四频道	0x600	S2MM CH4CR_	CH4 控制寄存器
	0x604	S2MM CH4SR_	CH4 状态寄存器
	0x608	S2MM CH4CURDESC LSB_	CH4 电流描述符（LSB）
	0x60C	S2MM CH4CURDESC MSB_	CH4 当前描述符（最高有效位）
	0x610	S2MM CH4尾部描述 LSB_	CH4 尾描述符（LSB）
	0x614	S2MM CH4尾部描述 MSB_	CH4 尾描述符（最高有效位）
	0x618	S2MM CH4PKTDROP STAT	CH4 数据包丢失统计
	0x61C	S2MM_CH4包计数_STAT	CH4 数据包处理计数
	0x620-0x63C		RSVD

Table 4: **AXI MCDMA Core Register Space (S2MM)** *(cont'd)*

	Register Offset	Name	Register Description
Channel 1	0x540	S2MM_CH1CR	CH1 Control Register
	0x544	S2MM_CH1SR	CH1 Status Register
	0x548	S2MM_CH1CURDESC_LSB	CH1 Current Descriptor (LSB)
	0x54C	S2MM_CH1CURDESC_MSB	CH1 Current Descriptor (MSB)
	0x550	S2MM_CH1TAILDESC_LSB	CH1 Tail Descriptor (LSB)
	0x554	S2MM_CH1TAILDESC_MSB	CH1 Tail Descriptor (MSB)
	0x558	S2MM_CH1PKTDROP_STAT	CH1 Packet Drop Stat
	0x55C	S2MM_CH1PKTCOUNT_STAT	CH1 Packet Processed count
	0x560-0x57C		RSVD
Channel 2	0x580	S2MM_CH2CR	CH2 Control Register
	0x584	S2MM_CH2SR	CH2 Status Register
	0x588	S2MM_CH2CURDESC_LSB	CH2 Current Descriptor (LSB)
	0x58C	S2MM_CH2CURDESC_MSB	CH2 Current Descriptor (MSB)
	0x590	S2MM_CH2TAILDESC_LSB	CH2 Tail Descriptor (LSB)
	0x594	S2MM_CH2TAILDESC_MSB	CH2 Tail Descriptor (MSB)
	0x598	S2MM_CH2PKTDROP_STAT	CH2 Packet Drop Stat
	0x59C	S2MM_CH2PKTCOUNT_STAT	CH2 Packet Processed count
	0x5A0-0x5BC		RSVD
Channel 3	0x5C0	S2MM_CH3CR	CH3 Control Register
	0x5C4	S2MM_CH3SR	CH3 Status Register
	0x5C8	S2MM_CH3CURDESC_LSB	CH3 Current Descriptor (LSB)
	0x5CC	S2MM_CH3CURDESC_MSB	CH3 Current Descriptor (MSB)
	0x5D0	S2MM_CH3TAILDESC_LSB	CH3 Tail Descriptor (LSB)
	0x5D4	S2MM_CH3TAILDESC_MSB	CH3 Tail Descriptor (MSB)
	0x5D8	S2MM_CH3PKTDROP_STAT	CH3 Packet Drop Stat
	0x5DC	S2MM_CH3PKTCOUNT_STAT	CH3 Packet Processed count
	0x5E0-0x5FC		RSVD
Channel 4	0x600	S2MM_CH4CR	CH4 Control Register
	0x604	S2MM_CH4SR	CH4 Status Register
	0x608	S2MM_CH4CURDESC_LSB	CH4 Current Descriptor (LSB)
	0x60C	S2MM_CH4CURDESC_MSB	CH4 Current Descriptor (MSB)
	0x610	S2MM_CH4TAILDESC_LSB	CH4 Tail Descriptor (LSB)
	0x614	S2MM_CH4TAILDESC_MSB	CH4 Tail Descriptor (MSB)
	0x618	S2MM_CH4PKTDROP_STAT	CH4 Packet Drop Stat
	0x61C	S2MM_CH4PKTCOUNT_STAT	CH4 Packet Processed count
	0x620-0x63C		RSVD

表 4：AXI MCDMA 核心寄存器空间（S2MM）（续）

	寄存器偏移	Name	寄存器描述
第五频道	0x640	S2MM CH5CR_	CH5 控制寄存器
	0x644	S2MM CH5SR_	CH5 状态寄存器
	0x648	S2MM CH5CURDESC LSB_	CH5 电流描述符（LSB）
	0x64C	S2MM CH5CURDESC MSB_	CH5 电流描述符（最高有效位）
	0x650	S2MM CH5尾部描述 LSB_	CH5 尾描述符（LSB）
	0x654	S2MM CH5尾部描述 MSB_	CH5 尾描述符（最高有效字节）
	0x658	S2MM CH5PKTDROP STAT	CH5 数据包丢失统计
	0x65C	S2MM_CH5数据包计数_STAT	CH5 数据包处理计数
	0x660-0x67C		RSVD
第六频道	0x680	S2MM CH6CR_	CH6 控制寄存器
	0x684	S2MM CH6SR_	CH6 状态寄存器
	0x688	S2MM CH6CURDESC LSB_	CH6 电流描述符（LSB）
	0x68C	S2MM CH6CURDESC MSB_	CH6 电流描述符（最高有效位）
	0x690	S2MM CH6尾部描述 LSB_	CH6 尾描述符（LSB）
	0x694	S2MM CH6尾部描述 MSB_	CH6 尾描述符（最高有效位）
	0x698	S2MM CH6PKTDROP STAT	CH6 数据包丢失统计
	0x69C	S2MM_CH6数据包计数_STAT	CH6 数据包处理计数
	0x6A0-0x6BC		RSVD
第7频道	0x6C0	S2MM CH7CR_	CH7 控制寄存器
	0x6C4	S2MM CH7SR_	CH7 状态寄存器
	0x6C8	S2MM CH7CURDESC LSB_	CH7 电流描述符（LSB）
	0x6CC	S2MM CH7CURDESC MSB_	CH7 电流描述符（MSB）
	0x6D0	S2MM CH7尾部描述 LSB_	CH7 尾描述符（LSB）
	0x6D4	S2MM CH7尾部描述 MSB_	CH7 尾描述符（最高有效位）
	0x6D8	S2MM CH7PKTDROP STAT	CH7 数据包丢失统计
	0x6DC	S2MM_CH7数据包计数_STAT	CH7 数据包处理计数
	0x6E0-0x6FC		RSVD
第8频道	0x700	S2MM CH8CR_	CH8 控制寄存器
	0x704	S2MM CH8SR_	CH8 状态寄存器
	0x708	S2MM CH8CURDESC LSB_	CH8 电流描述符（LSB）
	0x70C	S2MM CH8CURDESC MSB_	CH8 电流描述符（最高有效字节）
	0x710	S2MM CH8尾部描述 LSB_	CH8 尾描述符（LSB）
	0x714	S2MM CH8尾部描述 MSB_	CH8 尾描述符（最高有效位）
	0x718	S2MM CH8PKTDROP STAT	CH8 数据包丢失统计
	0x71C	S2MM_CH8数据包计数_STAT	CH8 数据包处理计数
	0x720-0x73C		RSVD

Table 4: **AXI MCDMA Core Register Space (S2MM)** *(cont'd)*

	Register Offset	Name	Register Description
Channel 5	0x640	S2MM_CH5CR	CH5 Control Register
	0x644	S2MM_CH5SR	CH5 Status Register
	0x648	S2MM_CH5CURDESC_LSB	CH5 Current Descriptor (LSB)
	0x64C	S2MM_CH5CURDESC_MSB	CH5 Current Descriptor (MSB)
	0x650	S2MM_CH5TAILDESC_LSB	CH5 Tail Descriptor (LSB)
	0x654	S2MM_CH5TAILDESC_MSB	CH5 Tail Descriptor (MSB)
	0x658	S2MM_CH5PKTDROP_STAT	CH5 Packet Drop Stat
	0x65C	S2MM_CH5PKTCOUNT_STAT	CH5 Packet Processed count
	0x660-0x67C		RSVD
Channel 6	0x680	S2MM_CH6CR	CH6 Control Register
	0x684	S2MM_CH6SR	CH6 Status Register
	0x688	S2MM_CH6CURDESC_LSB	CH6 Current Descriptor (LSB)
	0x68C	S2MM_CH6CURDESC_MSB	CH6 Current Descriptor (MSB)
	0x690	S2MM_CH6TAILDESC_LSB	CH6 Tail Descriptor (LSB)
	0x694	S2MM_CH6TAILDESC_MSB	CH6 Tail Descriptor (MSB)
	0x698	S2MM_CH6PKTDROP_STAT	CH6 Packet Drop Stat
	0x69C	S2MM_CH6PKTCOUNT_STAT	CH6 Packet Processed count
	0x6A0-0x6BC		RSVD
Channel 7	0x6C0	S2MM_CH7CR	CH7 Control Register
	0x6C4	S2MM_CH7SR	CH7 Status Register
	0x6C8	S2MM_CH7CURDESC_LSB	CH7 Current Descriptor (LSB)
	0x6CC	S2MM_CH7CURDESC_MSB	CH7 Current Descriptor (MSB)
	0x6D0	S2MM_CH7TAILDESC_LSB	CH7 Tail Descriptor (LSB)
	0x6D4	S2MM_CH7TAILDESC_MSB	CH7 Tail Descriptor (MSB)
	0x6D8	S2MM_CH7PKTDROP_STAT	CH7 Packet Drop Stat
	0x6DC	S2MM_CH7PKTCOUNT_STAT	CH7 Packet Processed count
	0x6E0-0x6FC		RSVD
Channel 8	0x700	S2MM_CH8CR	CH8 Control Register
	0x704	S2MM_CH8SR	CH8 Status Register
	0x708	S2MM_CH8CURDESC_LSB	CH8 Current Descriptor (LSB)
	0x70C	S2MM_CH8CURDESC_MSB	CH8 Current Descriptor (MSB)
	0x710	S2MM_CH8TAILDESC_LSB	CH8 Tail Descriptor (LSB)
	0x714	S2MM_CH8TAILDESC_MSB	CH8 Tail Descriptor (MSB)
	0x718	S2MM_CH8PKTDROP_STAT	CH8 Packet Drop Stat
	0x71C	S2MM_CH8PKTCOUNT_STAT	CH8 Packet Processed count
	0x720-0x73C		RSVD

表 4：AXI MCDMA 核心寄存器空间（S2MM）（续）

	寄存器偏移	Name	寄存器描述
第九频道	0x740	S2MM CH9CR_	CH9 控制寄存器
	0x744	S2MM CH9SR_	CH9 状态寄存器
	0x748	S2MM CH9CURDESC LSB_ -	CH9 当前描述符（最低有效字节）
	0x74C	S2MM CH9CURDESC MSB_ -	CH9 当前描述符（MSB）
	0x750	S2MM CH9尾部描述 LSB_ -	CH9 尾描述符（LSB）
	0x754	S2MM CH9尾部描述 MSB_ -	CH9 尾描述符（最高有效位）
	0x758	S2MM CH9PKTDROP STAT	CH9 数据包丢失统计
	0x75C	S2MM_CH9数据包计数_STAT	CH9 数据包处理计数
	0x760-0x77C		RSDV
频道10	0x780	S2MM CH10CR_	CH10 控制寄存器
	0x784	S2MM CH10SR_	CH10 状态寄存器
	0x788	S2MM CH10CURDESC LSB_ -	CH10 当前描述符（最低有效位）
	0x78C	S2MM CH10CURDESC MSB_ -	CH10 当前描述符（MSB）
	0x790	S2MM 第10章尾部描述 LSB_ -	CH10 尾描述符（LSB）
	0x794	S2MM CH10尾部描述 MSB_ -	CH10 尾描述符（最高有效位）
	0x798	S2MM CH10PKTDROP 状态_ -	CH10 数据包丢失统计
	0x79C	S2MM_CH10数据包计数_STAT	CH10 数据包处理计数
	0x7A0-0x7BC		RSVD
频道11	0x7C0	S2MM CH11CR_	CH11 控制寄存器
	0x7C4	S2MM CH11SR_	CH11 状态寄存器
	0x7C8	S2MM CH11CURDESC LSB_ -	CH11 当前描述符（最低有效位）
	0x7CC	S2MM CH11CURDESC MSB_ -	CH11 当前描述符（MSB）
	0x7D0	S2MM CH11尾部描述 LSB_ -	CH11 尾描述符（LSB）
	0x7D4	S2MM CH11尾部描述 MSB_ -	CH11 尾描述符（最高有效位）
	0x7D8	S2MM CH11PKTDROP 状态_ -	CH11 数据包丢失统计
	0x7DC	S2MM_CH11数据包计数_STAT	CH11 数据包处理计数
	0x7E0-0x7FC		RSVD
12频道	0x800	S2MM CH12CR_	CH12 控制寄存器
	0x804	S2MM CH12SR_	CH12 状态寄存器
	0x808	S2MM CH12CURDESC LSB_ -	CH12 电流描述符（LSB）
	0x80C	S2MM CH12CURDESC MSB_ -	CH12 电流描述符（MSB）
	0x810	S2MM 第12章尾部描述 LSB_ -	CH12 尾描述符（LSB）
	0x814	S2MM CH12尾部描述 MSB_ -	CH12 尾描述符（最高有效位）
	0x818	S2MM CH12PKTDROP 状态_ -	CH12 数据包丢失统计
	0x81C	S2MM_CH12数据包计数_STAT	CH12 数据包处理计数
	0x820-0x83C		RSVD

Table 4: **AXI MCDMA Core Register Space (S2MM)** *(cont'd)*

	Register Offset	Name	Register Description
Channel 9	0x740	S2MM_CH9CR	CH9 Control Register
	0x744	S2MM_CH9SR	CH9 Status Register
	0x748	S2MM_CH9CURDESC_LSB	CH9 Current Descriptor (LSB)
	0x74C	S2MM_CH9CURDESC_MSB	CH9 Current Descriptor (MSB)
	0x750	S2MM_CH9TAILDESC_LSB	CH9 Tail Descriptor (LSB)
	0x754	S2MM_CH9TAILDESC_MSB	CH9 Tail Descriptor (MSB)
	0x758	S2MM_CH9PKTDROP_STAT	CH9 Packet Drop Stat
	0x75C	S2MM_CH9PKTCOUNT_STAT	CH9 Packet Processed count
	0x760-0x77C		RSDV
Channel 10	0x780	S2MM_CH10CR	CH10 Control Register
	0x784	S2MM_CH10SR	CH10 Status Register
	0x788	S2MM_CH10CURDESC_LSB	CH10 Current Descriptor (LSB)
	0x78C	S2MM_CH10CURDESC_MSB	CH10 Current Descriptor (MSB)
	0x790	S2MM_CH10TAILDESC_LSB	CH10 Tail Descriptor (LSB)
	0x794	S2MM_CH10TAILDESC_MSB	CH10 Tail Descriptor (MSB)
	0x798	S2MM_CH10PKTDROP_STAT	CH10 Packet Drop Stat
	0x79C	S2MM_CH10PKTCOUNT_STAT	CH10 Packet Processed count
	0x7A0-0x7BC		RSVD
Channel 11	0x7C0	S2MM_CH11CR	CH11 Control Register
	0x7C4	S2MM_CH11SR	CH11 Status Register
	0x7C8	S2MM_CH11CURDESC_LSB	CH11 Current Descriptor (LSB)
	0x7CC	S2MM_CH11CURDESC_MSB	CH11 Current Descriptor (MSB)
	0x7D0	S2MM_CH11TAILDESC_LSB	CH11 Tail Descriptor (LSB)
	0x7D4	S2MM_CH11TAILDESC_MSB	CH11 Tail Descriptor (MSB)
	0x7D8	S2MM_CH11PKTDROP_STAT	CH11 Packet Drop Stat
	0x7DC	S2MM_CH11PKTCOUNT_STAT	CH11 Packet Processed count
	0x7E0-0x7FC		RSVD
Channel 12	0x800	S2MM_CH12CR	CH12 Control Register
	0x804	S2MM_CH12SR	CH12 Status Register
	0x808	S2MM_CH12CURDESC_LSB	CH12 Current Descriptor (LSB)
	0x80C	S2MM_CH12CURDESC_MSB	CH12 Current Descriptor (MSB)
	0x810	S2MM_CH12TAILDESC_LSB	CH12 Tail Descriptor (LSB)
	0x814	S2MM_CH12TAILDESC_MSB	CH12 Tail Descriptor (MSB)
	0x818	S2MM_CH12PKTDROP_STAT	CH12 Packet Drop Stat
	0x81C	S2MM_CH12PKTCOUNT_STAT	CH12 Packet Processed count
	0x820-0x83C		RSVD

表 4：AXI MCDMA 核心寄存器空间（S2MM）（续）

	寄存器偏移	Name	寄存器描述
13频道	0x840	S2MM CH13CR_	CH13 控制寄存器
	0x844	S2MM CH13SR_	CH13 状态寄存器
	0x848	S2MM CH13CURDESC LSB_ -	CH13 当前描述符（最低有效位）
	0x84C	S2MM CH13CURDESC MSB_ -	CH13 当前描述符（MSB）
	0x850	S2MM 第13章尾部描述 LSB_ -	CH13 尾描述符（LSB）
	0x854	S2MM 第13章尾部描述 MSB_ -	CH13 尾描述符（最高有效位）
	0x858	S2MM CH13PKTDROP 状态_ -	CH13 数据包丢失统计
	0x85C	S2MM_CH13数据包计数_STAT	CH13 数据包处理计数
	0x860-0x87C		RSVD
频道14	0x880	S2MM CH14CR_	CH14 控制寄存器
	0x884	S2MM CH14SR_	CH14 状态寄存器
	0x888	S2MM CH14CURDESC LSB_ -	CH14 当前描述符 (LSB)
	0x88C	S2MM CH14CURDESC MSB_ -	CH14 当前描述符（MSB）
	0x890	S2MM CH14尾部描述 LSB_ -	CH14 尾描述符（LSB）
	0x894	S2MM CH14尾部描述 MSB_ -	CH14 尾描述符（最高有效位）
	0x898	S2MM CH14PKTDROP 状态_ -	CH14 数据包丢失统计
	0x89C	S2MM_CH14数据包计数_STAT	CH14 数据包处理计数
	0x8A0-0x8BC		RSVD
频道15	0x8C0	S2MM CH15CR_	CH15 控制寄存器
	0x8C4	S2MM CH15SR_	CH15 状态寄存器
	0x8C8	S2MM CH15CURDESC LSB_ -	CH15 当前描述符（最低有效位）
	0x8CC	S2MM CH15CURDESC MSB_ -	CH15 当前描述符（MSB）
	0x8D0	S2MM CH15尾部描述 LSB_ -	CH15 尾描述符（LSB）
	0x8D4	S2MM CH15尾部描述 MSB_ -	CH15 尾描述符（最高有效位）
	0x8D8	S2MM CH15PKTDROP STAT_ -	CH15 数据包丢失统计
	0x8DC	S2MM_CH15数据包计数_STAT	CH15 数据包处理计数
	0x8E0-0x8FC		RSVD
频道16	0x900	S2MM CH16CR_	CH16 控制寄存器
	0x904	S2MM CH16SR_	CH16 状态寄存器
	0x908	S2MM CH16CURDESC LSB_ -	CH16 电流描述符（LSB）
	0x90C	S2MM CH16CURDESC MSB_ -	CH16 电流描述符（最高有效位）
	0x910	S2MM CH16尾部描述 LSB_ -	CH16 尾描述符（LSB）
	0x914	S2MM CH16尾部描述 MSB_ -	CH16 尾描述符（最高有效位）
	0x918	S2MM CH16PKTDROP STAT_ -	CH16 数据包丢失统计
	0x91C	S2MM_CH16数据包计数_STAT	CH16 数据包处理计数
	0x920-0x93C		RSVD

Table 4: **AXI MCDMA Core Register Space (S2MM)** *(cont'd)*

	Register Offset	Name	Register Description
Channel 13	0x840	S2MM_CH13CR	CH13 Control Register
	0x844	S2MM_CH13SR	CH13 Status Register
	0x848	S2MM_CH13CURDESC_LSB	CH13 Current Descriptor (LSB)
	0x84C	S2MM_CH13CURDESC_MSB	CH13 Current Descriptor (MSB)
	0x850	S2MM_CH13TAILDESC_LSB	CH13 Tail Descriptor (LSB)
	0x854	S2MM_CH13TAILDESC_MSB	CH13 Tail Descriptor (MSB)
	0x858	S2MM_CH13PKTDROP_STAT	CH13 Packet Drop Stat
	0x85C	S2MM_CH13PKTCOUNT_STAT	CH13 Packet Processed count
	0x860-0x87C		RSVD
Channel 14	0x880	S2MM_CH14CR	CH14 Control Register
	0x884	S2MM_CH14SR	CH14 Status Register
	0x888	S2MM_CH14CURDESC_LSB	CH14 Current Descriptor (LSB)
	0x88C	S2MM_CH14CURDESC_MSB	CH14 Current Descriptor (MSB)
	0x890	S2MM_CH14TAILDESC_LSB	CH14 Tail Descriptor (LSB)
	0x894	S2MM_CH14TAILDESC_MSB	CH14 Tail Descriptor (MSB)
	0x898	S2MM_CH14PKTDROP_STAT	CH14 Packet Drop Stat
	0x89C	S2MM_CH14PKTCOUNT_STAT	CH14 Packet Processed count
	0x8A0-0x8BC		RSVD
Channel 15	0x8C0	S2MM_CH15CR	CH15 Control Register
	0x8C4	S2MM_CH15SR	CH15 Status Register
	0x8C8	S2MM_CH15CURDESC_LSB	CH15 Current Descriptor (LSB)
	0x8CC	S2MM_CH15CURDESC_MSB	CH15 Current Descriptor (MSB)
	0x8D0	S2MM_CH15TAILDESC_LSB	CH15 Tail Descriptor (LSB)
	0x8D4	S2MM_CH15TAILDESC_MSB	CH15 Tail Descriptor (MSB)
	0x8D8	S2MM_CH15PKTDROP_STAT	CH15 Packet Drop Stat
	0x8DC	S2MM_CH15PKTCOUNT_STAT	CH15 Packet Processed count
	0x8E0-0x8FC		RSVD
Channel 16	0x900	S2MM_CH16CR	CH16 Control Register
	0x904	S2MM_CH16SR	CH16 Status Register
	0x908	S2MM_CH16CURDESC_LSB	CH16 Current Descriptor (LSB)
	0x90C	S2MM_CH16CURDESC_MSB	CH16 Current Descriptor (MSB)
	0x910	S2MM_CH16TAILDESC_LSB	CH16 Tail Descriptor (LSB)
	0x914	S2MM_CH16TAILDESC_MSB	CH16 Tail Descriptor (MSB)
	0x918	S2MM_CH16PKTDROP_STAT	CH16 Packet Drop Stat
	0x91C	S2MM_CH16PKTCOUNT_STAT	CH16 Packet Processed count
	0x920-0x93C		RSVD

表 4：AXI MCDMA 核心寄存器空间（S2MM）（续）

	寄存器偏移	Name	寄存器描述
频道组	0x940	S2MM 频道观察器 1	频道服务信息 在 Vivado IDE 中选择的通道 第一组
	0x944	S2MM 频道观察器 2	频道服务信息 在 Vivado IDE 中选择的通道 第二组
	0x948	S2MM 频道观察器 3	频道服务信息 在 Vivado IDE 中选择的通道 第三组
	0x94C	S2MM 频道观察器 4	频道服务信息 在 Vivado IDE 中选择的通道 第四组
	0x950	S2MM 频道观察器 5	频道服务信息 在 Vivado IDE 中选择的通道 第五组
	0x954	S2MM 频道观察器 6	频道服务信息 在 Vivado IDE 中选择的通道 第六组

常见的 AXI MCDMA 核心寄存器空间如下表所示 .

表5：常用AXI MCDMA核心寄存器空间

	寄存器偏移	Name	寄存器描述
SG 用户/缓存	0x4B0	SG 缓存 用户_ _	设置缓存端口和用户端口的值 (读与写)

MM2S 通用控制寄存器 (0x000)

MM2S路径有一个控制寄存器用于控制MCDMA引擎。该寄存器允许您重置或将MCDMA置于运行模式。

表6：MM2S 通用控制寄存器 (0x000)

Bits	Name	默认价值	访问	描述
31:18	RSVD			

Table 4: **AXI MCDMA Core Register Space (S2MM)** *(cont'd)*

	Register Offset	Name	Register Description
Channel Groups	0x940	S2MM Channel Observer 1	Channel service information for the channels selected in Vivado IDE under Group 1
	0x944	S2MM Channel Observer 2	Channel service information for thechannels selected in Vivado IDE under Group 2
	0x948	S2MM Channel Observer 3	Channel service information for the channels selected in Vivado IDE under Group 3
	0x94C	S2MM Channel Observer 4	Channel service information for the channels selected in Vivado IDE under Group 4
	0x950	S2MM Channel Observer 5	Channel service information for the channels selected in Vivado IDE under Group 5
	0x954	S2MM Channel Observer 6	Channel service information for the channels selected in Vivado IDE under Group 6

The common AXI MCDMA core register space is shown in the following table.

Table 5: **Common AXI MCDMA Core Register Space**

	Register Offset	Name	Register Description
SG User/Cache	0x4B0	SG_CACHE_USER	Set the values for cache and user ports (read and write)

MM2S Common Control Register (0x000)

The MM2S path has a control register to control the MCDMA engine. This register allows you to reset or put the MCDMA in run mode.

Table 6: **MM2S Common Control Register (0x000)**

Bits	Name	Default Value	Access	Description
31:18	RSVD			

表6：MM2S 通用控制寄存器 (0x000)（续）

Bits	Name	默认价值	访问	描述
17:4	多通道复位 ti_ _ 我出去	1562	R/W	超时的延迟计数 范围：1562 - 16000 超时设置 = 超时值 * 128 * 分散汇总时钟时间段 如果对一个通道发出软复位 , 没有错误的 , • IP等待一段时间以结束当前的在 MM2S 中处理 BD。 • 如果未接收到 EOF 并且发生超时 , IP 在 MM2S 中对该通道进行软复位。 • 如果在 2*超时后未置位停止完成位时间，IP 需要完全重置。（这意味着 IP 无法处理通道软重置 注意：此寄存器仅在进行软复位时适用频道已启用 .
3	RSVD			此寄存器仅在每次软复位时适用频道已启用 .
2	多通道 MCDMA 重置 (MCDMA.RST)	0	R/W	用于重置 AXI MCDMA 内核的软复位。设置此项将位设置为1会导致AXI MCDMA复位。复位是优雅地完成。待处理的命令/转账已刷新或完成。软重置完成后，所有寄存器和位都处于复位状态。 • 0 = 重置未进行。正常操作。 • 1 = 重置进行中。 这会重置所有通道并清除所有寄存器。在软重置后重新配置 MCDMA。正在重置 MM2S 也会重置 S2MM .
1	RSVD			
0	多通道MCDMA RunStop (MCDMA.RS)	0	R/W	启动/停止多通道 MM2S MCDMA 通道。 • 0 = 停止 – 当电流（如果有的话）时，MCDMA 停止 MCDMA 操作已完成。用于散点聚集挂起命令/传输的模式被刷新或已完成。更新队列中的描述符是允许在完成更新到远程内存之前引擎停止。无法保证 MM2S AXI4 上的数据完整性保证。MCDMA 状态中的停止位当 MCDMA 引擎时，寄存器断言为1已停止。此位在出现错误时由硬件清除发生以及每通道参数的软复位为已禁用。CPU 也可以选择清除此位以停止 MCDMA 操作。 • 1 = 运行 – 启动 MCDMA 操作。停止位在当 MCDMA 状态寄存器撤消至 0 时 MCDMA 引擎开始运作。

MM2S 通用状态寄存器 (0x004)

MM2S路径有一个公共状态寄存器用于跟踪MCDMA状态。该寄存器提供MCDMA引擎的整体状态。

Table 6: **MM2S Common Control Register (0x000)** *(cont'd)*

Bits	Name	Default Value	Access	Description
17:4	Multichannel_reset_timeout	1562	R/W	Delay count for timeout Range: 1562 - 16000 Timeout time = Timeout value * 128* scatter gather clock time period If soft reset is issued on a channel, which has no error, • The IP waits for some time to end the current processing BD in MM2S. • If EOF is not received and timeout occurs, the IP proceeds with soft reset of that channel in MM2S. • If halt complete bit is not asserted after 2*timeout time, the IP needs a complete reset. (It means the IP is unable to process channel soft reset) ***Note***: This register is applicable only when soft reset per channel is enabled.
3	RSVD			This register is only applicable when soft reset per channel is enabled.
2	Multichannel MCDMA Reset (MCDMA.RST)	0	R/W	Soft reset for resetting the AXI MCDMA core. Setting this bit to a 1 causes the AXI MCDMA to be reset. Reset is accomplished gracefully. Pending commands/transfers are flushed or completed. After completion of a soft reset, all registers and bits are in the Reset State. • 0 = Reset not in progress. Normal operation. • 1 = Reset in progress. This resets all the channels and clears all the registers. Re-configure the MCDMA after a soft reset. Resetting the MM2S also resets the S2MM.
1	RSVD			
0	Multichannel MCDMA RunStop (MCDMA.RS)	0	R/W	Start/Stop the Multichannel MM2S MCDMA channel. • 0 = Stop – MCDMA stops when current (if any) MCDMA operations are complete. For Scatter-Gather Mode pending commands/transfers are flushed or completed. Descriptors in the update queue are allowed to finish updating to remote memory before engine halt. Data integrity on MM2S AXI4 cannot be guaranteed. The halted bit in the MCDMA Status register asserts to 1 when the MCDMA engine is halted. This bit is cleared by hardware when an error occurs and soft reset per channel parameter is disabled. The CPU can also choose to clear this bit to stop MCDMA operations. • 1 = Run – Start MCDMA operations. The halted bit in the MCDMA Status register deasserts to 0 when the MCDMA engine begins operations.

MM2S Common Status Register (0x004)

The MM2S path has a common status register to keep track of the MCDMA status. This register provides the overall status of the MCDMA engine.

表7：MM2S 通用状态寄存器 (0x004)

Bits	Name	默认价值	访问	描述
31:2	RSVD			
1	Idle	0	RO	MCDMA MM2S 空闲。指示 AXI MCDMA 的状态操作。当空闲时，表示 SG 引擎已经到达所有通道的尾指针排队的描述符正在处理。写入到尾部指针寄存器自动重新启动到任何通道 MCDMA 操作： • 0 = 不闲置 • 1 = 空闲
0	停止 (MCDMA.已停止)	1	RO	MCDMA 已停止。指示运行/停止状态 MCDMA： • 0 = MCDMA 信道运行中 • 1 = MCDMA.RS 位被设置为 0 在 MCDMACR.RS = 0 之间可能会有延迟当 MCDMASR.Halted = 1时 .

MM2S 通道启用/禁用寄存器 (0x008)

该寄存器提供了启用/禁用特定通道被服务的功能。

表 8：MM2S 通道启用/禁用寄存器 (0x008)

Bits	Name	默认价值	访问	描述
31:16	保留	0	R	NA
15:0	通道启用	0x1	R/W	将某个位设置为1可以启用该通道的服务。每一位对应于特定通道；例如，位 [0] 对应通道 0，且位 [1] 对应频道 1 . 仅对应通道数量的位是可编程的。

该寄存器不会停止通道的 BD 获取；它只会阻止特定通道被服务。您可以随时编程该寄存器，但只有在调度器运行时检测到 BD 上的帧结束（EOF）位时，它才会生效。

注意：禁用通道不会禁用其中断行为。

MM2S 通道进行中寄存器 (0x00C)

该寄存器指示当前正在服务或操作的通道 ID。当 MCDMA 正在运行时，该值会根据正在处理的通道动态更新。在空闲状态下，寄存器保留最后完成通道的 ID。该值可能与 AXI4-Stream 端口上的 TDEST 值不同。

Table 7: **MM2S Common Status Register (0x004)**

Bits	Name	Default Value	Access	Description
31:2	RSVD			
1	Idle	0	RO	MCDMA MM2S Idle. Indicates the state of AXI MCDMA operations. When idle, indicates the SG Engine has reached the tail pointer for all the channels and all queued descriptors are processed. Writing to the tail pointer register to any channel automatically restarts MCDMA operations: • 0 = Not Idle • 1 = Idle
0	Halted (MCDMA.Halted)	1	RO	MCDMA Halted. Indicates the run/stop state of the MCDMA: • 0 = MCDMA channel running • 1 = MCDMA.RS bit is set to 0 There can be a delay between when MCDMACR.RS = 0 and when MCDMASR.Halted = 1.

MM2S Channel Enable/Disable Register (0x008)

This register provides the capability to enable/disable a particular channel from being serviced.

Table 8: **MM2S Channel Enable/Disable Register (0x008)**

Bits	Name	Default Value	Access	Description
31:16	Reserved	0	R	NA
15:0	Channel Enable	0x1	R/W	Setting a bit to 1 enables the channel for service. Each bit corresponds to a specific channel; for example, Bit [0] corresponds to Channel 0, and Bit [1] corresponds to Channel 1. Only those bits corresponding to the number of channels are programmable.

This register does not stop the BD fetch of the channel; it only stops a particular channel from being serviced. You can program this register at any time, but it comes into effect only when an end-of-frame (EOF) bit is detected on the BD while the scheduler is running.

Note: Disabling a channel does not disable its interrupt behavior.

MM2S Channel In Progress Register (0x00C)

This register indicates the Channel ID currently being serviced or operated on. When MCDMA is in operation, this value is updated dynamically based on the channel being processed. In the idle state, the register retains the ID of the last completed channel. It is possible for this value to differ from the TDEST value on the AXI4-Stream port.

表9：MM2S 通道进行中寄存器 (0x00C)

Bits	Name	默认价值	访问	描述
31:16	保留	0	R	NA
15:0	频道ID	0x0*	R	这是上次服务的通道ID。这个寄存器有一个独热值用于识别引起的通道错误。例如，值为1对应TDEST = 0，值为2对应于TDEST = 1，并且值为4 对应于 TDEST = 2。

N注意：如果IP被配置为有通道数 = 1，该值始终返回1。

MM2S 错误寄存器 (0x010)

该寄存器提供MM2S通道的错误状态。当MCDMA在任何MM2S通道上检测到错误时，该寄存器会更新。该寄存器中的所有位都是只读（RO）的。

当每通道软复位参数被禁用（C_ENABLE_MULTI_CH_RESET = 0）：任何错误情况都会导致 AXI MCDMA 平稳停止（所有通道）。MCDMACR.RS 位被设置为 0，当引擎完全关闭时，MCDMASR.Halted 位被设置为 1。必须重置 MCDMA 才能清除错误，并且必须重新对所有通道进行编程。

当启用每通道软复位参数(C_ENABLE_MULTI_CH_RESET = 1)时：任何通道出现错误都会导致该特定通道的操作停止，而MCDMA将继续处理其他已启用的通道。一旦错误通道被软复位并重新编程，IP将再次在该通道上开始操作。

表10：MM2S错误寄存器 (0x010)

Bits	Name	默认价值	访问	描述
31:7	RSVD			
6	SG解码错误	0	RO	散集解码错误：当发生以下情况时出现此错误 CURDESC_PTR和/或NXTDESC_PTR指向无效地址 ． • 0 = 无 SG 解码错误 ． • 1 = SG 解码错误检测到。MCDMA 引擎停止。此错误无法记录到描述符中。
5	SGS级别错误	0	R0	Scatter-Gather 从属错误：当从属出现此错误时从内存映射接口读取会产生从属错误。 • 0 = 无 SG 从属错误 ． • 1 = SG 检测到从属错误。MCDMA 引擎停止。此错误无法记录到描述符中。

Table 9: **MM2S Channel In Progress Register (0x00C)**

Bits	Name	Default Value	Access	Description
31:16	Reserved	0	R	NA
15:0	Channel ID	0x0*	R	This is the channel ID that was last serviced. This register has a one-hot value to identify the channel that caused the error. For example, a value of 1 corresponds to TDEST = 0, a value of 2 corresponds to TDEST = 1, and a value of 4 corresponds to TDEST = 2.

Note: If the IP is configured to have Number of channels = 1, this value always returns 1.

MM2S Error Register (0x010)

This register provides the error status of the MM2S channel. It is updated when MCDMA detects an error on any MM2S channel. All the bits in this register are read-only (RO).

When the soft reset per channel parameter is disabled (C_ENABLE_MULTI_CH_RESET = 0): Any error condition causes the AXI MCDMA to halt gracefully (all channels). The MCDMACR.RS bit is set to 0 and when the engine has completely shut down, the MCDMASR.Halted bit is set to 1. MCDMA has to be reset to clear the errors and the programming has to be done all over again (for all channels).

When the soft reset per channel parameter is enabled(C_ENABLE_MULTI_CH_RESET = 1): Any error in channel results in stopping the operations of that particular channel and MCDMA proceeds to work on the other enabled channels. Once the error channel is soft reset and re-programmed, the IP starts to operate on that channel again.

Table 10: **MM2S Error Register (0x010)**

Bits	Name	Default Value	Access	Description
31:7	RSVD			
6	SGDecErr	0	RO	Scatter-Gather Decode Error: This error occurs when CURDESC_PTR and/or NXTDESC_PTR point to an invalid address. • 0 = No SG Decode Errors. • 1 = SG Decode Error detected. MCDMA Engine halts. This error cannot be logged into the descriptor.
5	SGSlvErr	0	R0	Scatter-Gather Slave Error: This error occurs when a slave read from the Memory Map interface issues a Slave Error. • 0 = No SG Slave Errors. • 1 = SG Slave Error detected. MCDMA Engine halts. This error cannot be logged into the descriptor.

表 10：MM2S 错误寄存器 (0x010)（续）

Bits	Name	默认价值	访问	描述
4	SG整数错误	0	RO	Scatter-Gather 内部错误：当发生以下情况时会出现此错误已经设置了 Complete 位的描述符被获取。它向SG引擎发出信号，表明描述符是尾部描述符。 • 0 = 无 SG 内部错误 . • 1 = 检测到SG内部错误。此错误无法已登录到描述符。
3	RSVD			
2	DMA 解码错误	0	RO	MCDMA 解码错误：当发生此错误时地址请求指向无效地址。 • 0 = 无 MCDMA 解码错误 . • 检测到 1 = MCDMA 解码错误。此位可以被设置当这样的事件在任何一个频道上发生时。
1	DMA SLv 错误	0	RO	MCDMA 从设备错误：当从设备读取时发生此错误从内存映射接口发出从属错误。 • 0 = 无 MCDMA 从属错误 . • 检测到 1 = MCDMA 从属错误。此位可以被设置当这样的事件在任何一个频道上发生时。
0	DMA 内部错误	0	RO	MCDMA 内部错误：当缓冲区发生此错误时在获取的描述符中指定的长度被设置为0。 • 0 = 无 MCDMA 内部错误 . • 检测到 1 = MCDMA 内部错误。该位已被设置当这样的事件在任何一个频道上发生时。

MM2S 通道队列调度器类型 (0x014)

该寄存器指定了通道的 MM2S BD 队列的处理方式。BD 队列可以通过三种方式进行处理。这些方式可以在 IP 配置时设置，也可以通过寄存器编程在运行时更改。

表 11：MM2S 通道队列调度器类型 (0x014)

Bits	Name	默认价值	访问	描述
31:3	RSVD			
2	WRR 公平分配	0*	可读/可写，只读	当设置为1时，缓冲描述符（BDs）将被处理使用 WRR 公平分配方法。此位只能当 IP 配置为可编程时设置服务类型 (c_mm2s_调度器 = 0)。如果 IP 是可以配置为任何其他调度器机制的此位是只读的（RO）。
1	WRR	1*	可读/可写，只读	当设置为1时，BDs以加权轮询（WRR）的方式处理。只有在 IP 配置为拥有时才能设置此位一种可编程的服务类型 (c_mm2s_调度器 = 0)。如果该 IP 已配置为任何其他调度器机制，这是一个只读位 .

Table 10: **MM2S Error Register (0x010)** *(cont'd)*

Bits	Name	Default Value	Access	Description
4	SGIntErr	0	RO	Scatter-Gather Internal Error: This error occurs when a descriptor with the Complete bit already set is fetched. It signals to the SG Engine that the descriptor is a tail descriptor. • 0 = No SG Internal Errors. • 1 = SG Internal Error detected. This error cannot be logged into the descriptor.
3	RSVD			
2	DMA Dec Err	0	RO	MCDMA Decode Error: This error occurs when the address request points to an invalid address. • 0 = No MCDMA Decode Errors. • 1 = MCDMA Decode Error detected. This bit can be set when such an event occurs on any of the channels.
1	DMA SLv Err	0	RO	MCDMA Slave Error: This error occurs when a slave read from the Memory Map interface issues a Slave Error. • 0 = No MCDMA Slave Errors. • 1 = MCDMA Slave Error detected. This bit can be set when such an event occurs on any of the channels.
0	DMA Intr Err	0	RO	MCDMA Internal Error: This error occurs when the buffer length specified in the fetched descriptor is set to 0. • 0 = No MCDMA Internal Errors. • 1 = MCDMA Internal Error detected. This bit is set when such an event occurs on any of the channels.

MM2S Channel Queue Scheduler Type (0x014)

This register specifies the handling of MM2S BD queues of channels. There can be three ways by which the BD queues can be handled. These can also be set at the time of IP configuration or can be changed at runtime by way of register programming.

Table 11: **MM2S Channel Queue Scheduler Type (0x014)**

Bits	Name	Default Value	Access	Description
31:3	RSVD			
2	WRR Fair Distribution	0*	W/R, RO	When set to 1, the Buffer Descriptors (BDs) are processed using the WRR Fair Distribution method. This bit can only be set when the IP is configured with a programmable service type (c_mm2s_scheduler = 0). If the IP is configured with any other scheduler mechanism, this bit is read-only (RO).
1	WRR	1*	W/R, RO	When set to 1, the BDs are processed in a WRR manner. This bit can be set only when the IP is configured to have a programmable service type (c_mm2s_scheduler = 0). If the IP is configured for any other scheduler mechanism, this is an RO bit.

表11：MM2S通道队列调度器类型 (0x014)（续）

Bits	Name	默认价值	访问	描述
0	严格优先	0*	读/写，只读	当设置为1时，BD 将按严格优先级处理方式。只有在配置了 IP 时才能设置此部分拥有可编程服务类型 (c_mm2s_调度器 = 0）。如果IP被配置为任何其他调度器机制，这是一个只读位。

位 [2:0] 的有效值只能是 100、010 或 001。任何其他值都会导致 WRR 调度。此寄存器应仅在 MM2S 空闲时更新，并且仅当 IP 配置为调度器选项设置为可编程时才能更新。

对于任何通道，MM2S BD 队列应仅在设置了 EOF 位时结束。确保队列正确填充。如果没有，MCDMA 引擎可能会无限期地停止运行，或通过 AXI4-Stream 发送错误的数据。

注意：默认值是基于在 IP 配置中选择的调度器方案。当选择的调度器为可编程时，默认值设置为 010。当设置为严格优先级时，默认值为 001，而设置为 WRR-FD 时，默认值为 100。

MM2S 通道权重寄存器 (0x018, 0x01C)

该寄存器用于指定每个通道的权重。寄存器 0x018 用于前八个通道，寄存器 `0x01C` 用于剩余的八个通道。为已禁用的通道编程权重除了寄存器值的变化外没有其他效果。该寄存器可以在操作期间的任何时间进行编程。然而，只有当调度器迭代开始时，新值才会生效。更多信息请参见 MM2S 中的队列调度器。

表12：MM2S 通道权重寄存器 (0x018)

Bits	Name	默认价值	访问	描述
31:28	第8章的重量	1	R/W	指定一次要发送的数据包数量迭代。
27:24	第七章的权重	1	R/W	指定一次要发送的数据包数量迭代。
二十三二十	Ch6 的重量	1	R/W	指定一次要发送的数据包数量迭代。
一九一六	Ch5的重量	1	R/W	指定一次要发送的数据包数量迭代。
一五一二	Ch4的重量	1	R/W	指定一次要发送的数据包数量迭代。
11:8	Ch3 的重量	1	R/W	指定一次要发送的数据包数量迭代。
7:4	Ch2 的重量	1	R/W	指定一次要发送的数据包数量迭代。

Table 11: **MM2S Channel Queue Scheduler Type (0x014)** *(cont'd)*

Bits	Name	Default Value	Access	Description
0	Strict Priority	0*	W/R, RO	When set to 1, the BDs are processed in a Strict Priority manner. This bit can be set only when the IP is configured to have a programmable service type (c_mm2s_scheduler = 0). If the IP is configured for any other scheduler mechanism, this is an RO bit.

The bits [2:0] can only have values of 100, 010, or 001 as valid values. Any other value results in WRR scheduling. This register should only be updated when MM2S is idle and can only be updated when the IP is configured with the scheduler option set to Programmable.

For any channel, the MM2S BD queue should end only with the EOF bit set. Ensure that the queue is populated correctly. In its absence, the MCDMA engine can stall indefinitely or send incorrect data over the AXI4-Stream.

Note: The default value is based on the Scheduler scheme that is selected at IP configuration. When the scheduler selected is Programmable, the default value is set to 010. When set to Strict Priority, the default value is 001, and when set to WRR-FD, it is 100.

MM2S Channel Weight Registers (0x018, 0x01C)

This register is used to specify the weights for each of the channels. Register 0x018 is used for the first eight channels and register `0x01C` is used for the remaining eight channels. Programming weights for disabled channels has no effect other than a change in the value of the register. This register can be programmed at any time during the operation. However, the new values come into effect only when the scheduler iteration starts. For more information, see the Queue Scheduler in MM2S.

Table 12: **MM2S Channel Weight Registers (0x018)**

Bits	Name	Default Value	Access	Description
31:28	Weight for Ch8	1	R/W	Specifies the number of packets to be sent in one iteration.
27:24	Weight for Ch7	1	R/W	Specifies the number of packets to be sent in one iteration.
23:20	Weight for Ch6	1	R/W	Specifies the number of packets to be sent in one iteration.
19:16	Weight for Ch5	1	R/W	Specifies the number of packets to be sent in one iteration.
15:12	Weight for Ch4	1	R/W	Specifies the number of packets to be sent in one iteration.
11:8	Weight for Ch3	1	R/W	Specifies the number of packets to be sent in one iteration.
7:4	Weight for Ch2	1	R/W	Specifies the number of packets to be sent in one iteration.

表12：MM2S通道权重寄存器（0x018）（续）

Bits	Name	默认价值	访问	描述
3:0	Ch1的权重	1	R/W	指定一次要发送的数据包数量迭代 .

表 13：MM2S 通道权重寄存器 (0x01C)

Bits	Name	默认价值	访问	描述
31:28	Ch16的重量	1	R/W	指定一次要发送的数据包数量迭代 .
27:24	Ch15的重量	1	R/W	指定一次要发送的数据包数量迭代 .
二十三二十	Ch14的重量	1	R/W	指定一次要发送的数据包数量迭代 .
一九一六	Ch13的重量	1	R/W	指定一次要发送的数据包数量迭代 .
十五十二	Ch12的重量	1	R/W	指定一次要发送的数据包数量迭代 .
11:8	Ch11的重量	1	R/W	指定一次要发送的数据包数量迭代 .
7:4	Ch10的重量	1	R/W	指定一次要发送的数据包数量迭代 .
3:0	第9章的权重	1	R/W	指定一次要发送的数据包数量迭代 .

MM2S通道完成寄存器 (0x020)

此寄存器报告在给定时间服务的通道，有助于识别发送数据包的通道。

表14：MM2S 通道已完成寄存器 (0x020)

Bits	Name	默认价值	访问	描述
31:16	保留	0	R	NA
15:0	频道ID	0x0	RC	这是已服务的通道。位1上的值对应 TDEST = 0，位 2 上的一个值对应于 TDEST = 1，位3上的一个值对应于TDEST = 2 并且等等 . 该寄存器在读取时会被清除。

当带有帧起始 (SOF) 和帧结束 (EOF) 位的 BD/BDs 被处理并更新回内存时，通道被认为已得到服务。

Table 12: **MM2S Channel Weight Registers (0x018)** *(cont'd)*

Bits	Name	Default Value	Access	Description
3:0	Weight for Ch1	1	R/W	Specifies the number of packets to be sent in one iteration.

Table 13: **MM2S Channel Weight Registers (0x01C)**

Bits	Name	Default Value	Access	Description
31:28	Weight for Ch16	1	R/W	Specifies the number of packets to be sent in one iteration.
27:24	Weight for Ch15	1	R/W	Specifies the number of packets to be sent in one iteration.
23:20	Weight for Ch14	1	R/W	Specifies the number of packets to be sent in one iteration.
19:16	Weight for Ch13	1	R/W	Specifies the number of packets to be sent in one iteration.
15:12	Weight for Ch12	1	R/W	Specifies the number of packets to be sent in one iteration.
11:8	Weight for Ch11	1	R/W	Specifies the number of packets to be sent in one iteration.
7:4	Weight for Ch10	1	R/W	Specifies the number of packets to be sent in one iteration.
3:0	Weight for Ch9	1	R/W	Specifies the number of packets to be sent in one iteration.

MM2S Channels Completed Registers (0x020)

This register reports the channels serviced at a given instance, helping identify the channels where packets were sent.

Table 14: **MM2S Channels Completed Registers (0x020)**

Bits	Name	Default Value	Access	Description
31:16	Reserved	0	R	NA
15:0	Channel ID	0x0	RC	This is the channel that was serviced. A value on bit 1 corresponds to TDEST = 0, a value on bit 2 corresponds to TDEST = 1, a value on bit 3 corresponds to TDEST = 2 and so on. This register is cleared on read.

A channel is considered to be serviced when BD/BDs with start-of-frame (SOF) and EOF bits are processed and updated back in the memory.

MM2S ARCACHE 和 ARUSER 寄存器 (0x024)

编程此寄存器以设置AXI4读取接口（MM2S内存映射接口）的arcache 和aruser 端口的期望值。在MCDMA非空闲状态下不应编程此寄存器。

表 15：MM2S ARCACHE 和 ARUSER 寄存器 (0x024)

Bits	Name	默认价值	访问	描述
31:16	保留	0	R	NA
15:12	保留	0	RW	未使用
11:8	阿鲁瑟值	0	RW	编程设定所需的 aruser 值
7:4	保留	0	RW	未使用
3:0	Arcache 值	0x3	RW	编程设定所需的arcache值

MM2S 通道中断监控寄存器 (0x028)

该寄存器提供关于生成中断的通道的信息。当所有 MCDMA 的中断输出在系统级被逻辑或（OR）时，它可用于识别负责生成中断的通道。确定通道后，确保读取相应通道的状态寄存器，以获取有关中断原因的更多详细信息。

表16：MM2S通道中断监控寄存器（0x028）

Bits	Name	默认价值	访问	描述
31:16	保留	0	R	NA
15:0	频道ID	0x0	R	这提供有关频道的信息 生成了中断。第0到15位对应于 TDEST 0 到 15，分别 当相应的位时，比特会被自动清除 中断在通道状态寄存器中被清除。

MM2S 通道观察组 1-6 (0x440–0x454)

这些寄存器提供有关在 IP 定制期间根据通道分组得到服务的通道的信息。它们是寄存器 0x020 的子集。读取时，这些寄存器会被清除。

MM2S ARCACHE and ARUSER Registers (0x024)

Program this register to set the desired value for arcache and aruser ports of the AXI4 read interface (MM2S Memory Map Interface). This register should not be programmed while the MCDMA is non idle.

Table 15: **MM2S ARCACHE and ARUSER Registers (0x024)**

Bits	Name	Default Value	Access	Description
31:16	Reserved	0	R	NA
15:12	Reserved	0	RW	Unused
11:8	Aruser value	0	RW	Program the desired aruser value
7:4	Reserved	0	RW	Unused
3:0	Arcache value	0x3	RW	Program the desired arcache value

MM2S Channel Interrupt Monitor Register (0x028)

This register provides information about the channel(s) that generated the interrupt. It can be used to identify the channel(s) responsible for generating interrupts when all the MCDMA's Interrupt outputs are ORed at the system level. Once the channel(s) are identified, ensure to read the Status register of the corresponding channel to obtain further details about the interrupt cause.

Table 16: **MM2S Channel Interrupt Monitor Register (0x028)**

Bits	Name	Default Value	Access	Description
31:16	Reserved	0	R	NA
15:0	Channel ID	0x0	R	This gives information about the channel(s) that generated the interrupt. Bits 0 to 15 correspond to TDESTs 0 to 15, respectively Bits are automatically cleared when the corresponding interrupt is cleared in the channel status register.

MM2S Channel Observer Group 1-6 (0x440–0x454)

These registers provide information about the channel(s) that were serviced based on the grouping of channels during IP customization. They are sub-sets of register 0x020. These registers are cleared when read.

表17：MM2S通道观察器组1-6（0x440–0x454）

Bits	Name	默认价值	访问	描述
31:16	保留	0	R	NA
15:0	频道ID	0x0	RC	这是已经维修的通道。此寄存器有一个用于识别已处理通道的独热值。值为1对应 TDEST = 0，值为2对应于 TDEST = 1，值为 4 对应于 TDEST = 2 等等 . 该寄存器在读取时会被清除。

如果在 IP 定制时，为组 1 分配了通道 0、3 和 5，那么寄存器 `0x440` 只显示这些通道的状态。如果通道 0、1、2、3、4 和 5 都被服务过，则该寄存器包含值 000000000101001。

这个寄存器在多核（观察者）系统中非常有用，其中 MCDMA 对所有核心是共享资源。MCDMA IP 最多支持六个核心，并且 16 个通道可以作为静态配置分配到每个核心。每个组都提供了通道观察者寄存器，用于提供有关组中正在服务的通道的状态。

注意：每个通道都存在以下一组寄存器。

通道控制寄存器

每个频道 每个通道都有自己的控制寄存器，用于控制单个通道 el.

表18：通道控制寄存器

Bits	Name	默认价值	访问	描述
31:24	IRQ 延迟	0	R/W	中断延迟超时：此值用于设置中断超时时间。中断超时是一个使 MCDMA 引擎产生的机制在延迟时间段结束后发生的中断。计时器在数据包结束时开始计数并重置在收到新数据包或发生超时事件时发生。这个计数器在运行上的时钟是连接到Scatter Gather时钟端口。延迟计数器每经过125个时钟减一。 注意：将此值设置为零会禁用延迟定时器打断。
二十三 一十六	IRQ 阈值	0	R/W	中断阈值：此值用于设置中断阈值。当完成中断（IOC）中断事件发生时，内部计数器会倒计时来自中断阈值设置。当计数到零时，由…产生一个中断输出 MCDMA 引擎 注意：阈值的最小设置为 0x01。A 向此寄存器写入 0x00 没有任何效果。

Table 17: **MM2S Channel Observer Group 1-6 (0x440–0x454)**

Bits	Name	Default Value	Access	Description
31:16	Reserved	0	R	NA
15:0	Channel ID	0x0	RC	This is the channel that was serviced. This register has a one-hot value to identify the channel that was processed. A value of 1 corresponds to TDEST = 0, a value of 2 corresponds to TDEST = 1, a value of 4 corresponds to TDEST = 2 and so on. This register is cleared on read.

If at IP customization, Group 1 was allocated for Channels 0, 3, and 5, then register `0x440` displays the status only for those channels. If Channels 0, 1, 2, 3, 4, and 5 were serviced, this register contains a value of 000000000101001.

This register is useful in multi-core (Observer) system where MCDMA is a shared resource for all cores. MCDMA IP supports maximum of six cores and 16 Channels can be distributed across each core as a static configuration. The Channel Observer register is available for each group and provides the status about the channels in a group being serviced.

Note: The following set of registers are present per channel.

Channel Control Register

Each channel has its own Control register, which provides control over an individual channel.

Table 18: **Channel Control Register**

Bits	Name	Default Value	Access	Description
31:24	IRQ DELAY	0	R/W	Interrupt Delay Time Out: This value is used for setting the interrupt timeout value. The interrupt timeout is a mechanism for causing the MCDMA engine to generate an interrupt after the delay time period has expired. The timer begins counting at the end of a packet and resets with the receipt of a new packet or a timeout event occurs. This counter operates on the clock that is connected to the Scatter Gather clock port. The delay counter is decremented once every 125 clocks. ***Note:*** Setting this value to zero disables the delay timer interrupt.
23:16	IRQ Threshold	0	R/W	Interrupt Threshold: This value is used for setting the interrupt threshold. When Interrupt on Complete (IOC) interrupt events occur, an internal counter counts down from the Interrupt Threshold setting. When the count reaches zero, an interrupt out is generated by the MCDMA engine. ***Note:*** The minimum setting for the threshold is 0x01. A write of 0x00 to this register has no effect.

表18：通道控制寄存器（续）

Bits	Name	默认价值	访问	描述
15:8	RSVD			
7	错误 请求中断启用	0	R/W	错误中断使能：设置为1时，它允许错误事件生成中断输出。 • 0 = 错误中断已禁用。 • 1 = 错误中断已启用。
6	DlyIrqEn	0	R/W	延时定时器中断使能：当设置为1时，它允许错误事件产生一个中断输出。 • 0 = 延迟中断已禁用。 • 1 = 延迟中断已启用。
5	IOC_中断使能	0	R/W	完成中断使能：设置为1时，它允许完成中断事件生成一个为设置了 Complete 位的描述符输出中断。 • 0 = IOC 中断已禁用。 • 1 = IOC 中断已启用。
4	RSVD			
3	错误_在...上_其他_中断启用	0	R/W	在其他通道启用错误中断：当设置为1，它允许在其他通道事件上的出错中断生成一个中断输出。 • 0 = 中断已禁用。 • 1 = 中断已启用。
2	软重置 Ch_ _	0	R/W	当每通道进行软重置时，对 MM2S 通道进行软重置参数已启用。 当停止完成位被设置时，软复位位可以被清除在通道状态寄存器中。 注意：在每通道的软复位时，此位未使用残疾 .
1	RSVD			
0	频道.获取 (CH.RS)	0	R/W	开始/停止获取此频道的BD： 当设置为1时，该位不应设置为0。设置此位在 MCDMA 处于运行模式时将位设为 0 可能会导致未定义的行为。当进行软复位时，将此位设置为 0 已启用。清除通道软后可以启用复位位已清除 .

通道状态寄存器

每个通道都有自己的状态寄存器，它提供每个通道的状态。

表19：通道状态寄存器

Bits	Name	默认价值	访问	描述
31:24	IRQ 延迟状态	0	R	中断延迟时间状态：表示当前中断延迟时间值。

Table 18: **Channel Control Register** *(cont'd)*

Bits	Name	Default Value	Access	Description
15:8	RSVD			
7	Err Irq En	0	R/W	Interrupt on Error Interrupt Enable: When set to 1, it allows error events to generate an interrupt out. • 0 = Error Interrupt disabled. • 1 = Error Interrupt enabled.
6	DlyIrqEn	0	R/W	Interrupt on Delay Timer Interrupt Enable: When set to 1, it allows error events to generate an interrupt out. • 0 = Delay Interrupt disabled. • 1 = Delay Interrupt enabled.
5	IOC_IrqEn	0	R/W	Interrupt on Complete Interrupt Enable: When set to 1, it allows Interrupt On Complete events to generate an interrupt out for descriptors with the Complete bit set. • 0 = IOC Interrupt disabled. • 1 = IOC Interrupt enabled.
4	RSVD			
3	Err_on_other_IrqEn	0	R/W	Interrupt on Error on Other Channel Enable: When set to 1, it allows Interrupt On Error on Other Channels events to generate an interrupt out. • 0 = Interrupt disabled. • 1 = Interrupt enabled.
2	Soft_reset_Ch	0	R/W	Soft Reset for MM2S Channel when soft reset per channel parameter is enabled. Soft reset bit can be cleared when halt complete bit is set in channel status register. ***Note:*** This bit is unused when soft reset per channel is disabled.
1	RSVD			
0	CHANNEL.Fetch (CH.RS)	0	R/W	Start/Stop the fetch of BDs for this channel: When set to 1, this bit should not be set to 0. Setting this bit to 0 while the MCDMA is in run mode might result in undefined behavior. Set this bit to 0 when soft reset is enabled. Can be enabled after clearing the channel soft reset bit is cleared.

Channel Status Register

Each channel has its own Status register, which provides the status of each channel.

Table 19: **Channel Status Register**

Bits	Name	Default Value	Access	Description
31:24	IRQ DELAY Status	0	R	Interrupt delay time Status: Indicates current interrupt delay time value.

表19：通道状态寄存器（续）

Bits	Name	默认价值	访问	描述
二十三 一六	IRQ 阈值状态	0	R	中断阈值状态：指示当前中断 阈值 .
15:8	RSVD			
7	错误 中断	0	R	出错中断。设置为1时，表示触发中断 如果对应位发生错误，则会生成事件 控制寄存器已启用 (Err_IrqEn = 1)，一次中断 输出是由 AXI MCDMA 生成的。 当启用每通道参数的软复位时，这个 位可以通过通道软复位或系统复位清除。 当每通道软重置被禁用时，MCDMA 具有 在任何通道上因错误场景而被重置。
6	DlyIrq	0	R/WC	延迟中断：当设置为1时，表示一个 在延迟定时器超时时生成了中断事件。如果 控制寄存器中的相应位被启用 (Dly_IrqEn = 1)，从 AXI 生成一个中断输出 多用户码分多址 . • 0 = 无延迟中断。 • 1 = 检测到延迟中断。 向这个位写入1会清除它。
5	IOC_中断	0	R/WC	完成中断：当设置为1时，表示一个 在完成时生成了中断事件 描述符。对于带有 EOF 位的描述符，会发生这种情况 设置。如果控制寄存器中的相应位为 已启用 (IOC_IrqEn = 1) 并且如果中断阈值已 被满足时，它会导致从……生成一个中断 AXI MCDMA . • 0 = 没有 IOC 中断。 • 1 = 检测到IOC中断。 向这个位写入1会清除它。
4	RSVD			
3	错误_在_其他_中断	0	R/WC	在其他通道出现错误时中断：设置为1时，它 表示在……上生成了中断事件 检测其他通道（MM2S 或 S2MM）上的错误。 如果控制寄存器中的相应位被启用，它 导致从 AXI 生成中断输出 多用户码分多址 . 0 = 请勿打断。 1 = 检测到中断。 向这个位写入1会清除它。
2	通道_停止_完成 e	0	RO	将在软重置完成后被断言 通道。通道上的软复位可以清除并 在此位被置位后重新编程。 在“0”时清除软重置可能导致不当 功能性。
1	RSVD			
0	Idle	0	RO	MCDMA 信道空闲：表示 SG 引擎已 到达了关联通道的尾指针并 没有排队的BD。正在写入尾指针 注册会自动重新启动BD获取操作。 • 0 = 不闲置 . • 1 = 空闲.

Table 19: **Channel Status Register** *(cont'd)*

Bits	Name	Default Value	Access	Description
23:16	IRQ Threshold Status	0	R	Interrupt Threshold Status: Indicates current interrupt threshold value.
15:8	RSVD			
7	Err Irq	0	R	Interrupt on Error. When set to 1, indicates an interrupt event was generated on an error in corresponding bit if the control register is enabled (Err_IrqEn = 1), an interrupt out is generated from AXI MCDMA. When soft reset per channel parameter is enabled, this bit can be cleared by channel soft reset or system reset. When soft reset per channel is disabled, the MCDMA has to be reset for error scenarios on any channel.
6	DlyIrq	0	R/WC	Interrupt on Delay: When set to 1, it indicates that an interrupt event was generated on delay timer timeout. If the corresponding bit in the Control register is enabled (Dly_IrqEn = 1), an interrupt out is generated from the AXI MCDMA. • 0 = No Delay Interrupt. • 1 = Delay Interrupt detected. Writing a 1 to this bit clears it.
5	IOC_Irq	0	R/WC	Interrupt on Complete: When set to 1, it indicates that an interrupt event was generated on completion of a descriptor. This occurs for descriptors with the EOF bit set. If the corresponding bit in the Control register is enabled (IOC_IrqEn = 1) and if the interrupt threshold has been met, it causes an interrupt out to be generated from the AXI MCDMA. • 0 = No IOC Interrupt. • 1 = IOC Interrupt detected. Writing a 1 to this bit clears it.
4	RSVD			
3	Err_on_other_Irq	0	R/WC	Interrupt on Error on other channels: When set to 1, it indicates that an interrupt event was generated on detection of an error on other channels (MM2S or S2MM). If the corresponding bit in control register is enabled, it causes an interrupt out to be generated from AXI MCDMA. 0 = No Interrupt. 1 = Interrupt detected. Writing a 1 to this bit clears it.
2	Channel_Halt_Complete	0	RO	Will be asserted once the soft reset is complete on the channel. Soft reset on channel can be cleared and reprogrammed after this bit is asserted. Clearing the soft reset when '0' might cause improper functionality.
1	RSVD			
0	Idle	0	RO	MCDMA Channel Idle: Indicates the SG Engine has reached the tail pointer for the associated channel and there are no BDs queued. Writing to the tail pointer register automatically restarts the BD fetch operations. • 0 = Not Idle. • 1 = Idle.

通道电流描述寄存器

每个通道都有自己的电流描述符（CD）寄存器。

表 20：通道电流描述符（CD）寄存器

Bits	Name	默认价值	访问	描述
31:6	当前描述符地址	0	读/写，只读	指定当前描述符的地址。该值在 MCDMA 进入运行模式后无法更新。当 CH.RS 为 1 时，CURDESC_PTR 变为只读 (RO)。当 MCDMA 引擎正在运行时 (MCDMACR.RS = 1)，CURDESC_PTR 寄存器由 AXI MCDMA 更新为指示当前正在处理的描述符。在错误检测时，CURDESC_PTR 会被更新以反映与检测到的错误相关的描述符。
5:0	RSVD	0	NA	

如果 IP 配置的地址宽度大于 32（即参数 c_addr_width > 32），请在 MSB 寄存器中指定 CD 的剩余最高有效位，如下表所示。

表21：通道电流描述符 (CD) 寄存器（> 32 位）

Bits	Name	默认价值	访问	描述
31:0	当前描述符地址（MSB）	0	R/W	指定当前描述符的地址。这个寄存器仅在地址为 > 32 位时使用。该值在 MCDMA 进入运行模式后无法更新。

通道尾描述符寄存器

每个通道都有自己的尾描述符（TD）寄存器。

表22：通道尾描述符（TD）寄存器

Bits	Name	默认价值	访问	描述
31:6	尾描述符地址	0	R/W	指定尾部描述符的地址。此值可以在 MCDMA 运行时可以更新。写入此注册触发 BD 获取。它表示暂停描述符链中的指针。SG 引擎暂停在完成对……的操作后获取描述符其当前描述符指针匹配的描述符尾描述符指针。CPU 对其的写入 TAILDESC_PTR 寄存器导致 SG 引擎启动如果处于空闲状态，则获取描述符或重新启动 (MCDMASR.Idle = 1)。如果它不是空闲状态，正在写入 TAILDESC_PTR 除了重新定位之外没有其他效果暂停点。如果 AXI MCDMA 通道 MCDMACR.RS 位被设置为0，CPU对TAILDESC_PTR的写入寄存器除了重新定位暂停之外没有其他效果点。
5:0	RSVD	0	NA	

Channel Current Descriptor Registers

Each channel has its own Current Descriptor (CD) register.

Table 20: **Channel Current Descriptor (CD) Registers**

Bits	Name	Default Value	Access	Description
31:6	Current descriptor address	0	R/W, RO	Specifies the address of the current descriptor. This value cannot be updated after the MCDMA is put in run mode. When CH.RS is 1, CURDESC_PTR becomes Read Only (RO). When the MCDMA Engine is running (MCDMACR.RS = 1), the CURDESC_PTR register is updated by AXI MCDMA to indicate the current descriptor that is being worked on. On error detection, CURDESC_PTR is updated to reflect the descriptor associated with the detected error.
5:0	RSVD	0	NA	

If the IP is configured for address width greater than 32 (that is, parameter c_addr_width > 32), specify the remaining MSB bits of CD in the MSB register as shown in the following table.

Table 21: **Channel Current Descriptor (CD) Registers (> 32 Bits)**

Bits	Name	Default Value	Access	Description
31:0	Current descriptor address (MSB)	0	R/W	Specifies the address of the current descriptor. This register is used only when Addr is > 32 bits. This value cannot be updated after the MCDMA is put in run mode.

Channel Tail Descriptor Register

Each channel has its own Tail Descriptor (TD) registers.

Table 22: **Channel Tail Descriptor (TD) Register**

Bits	Name	Default Value	Access	Description
31:6	Tail descriptor address	0	R/W	Specifies the address of the Tail descriptor. This value can be updated while the MCDMA is running. Writing into this register triggers the BD fetch. It indicates the pause pointer in a descriptor chain. The SG Engine pauses descriptor fetching after completing operations on the descriptor whose current descriptor pointer matches the tail descriptor pointer. A write by the CPU to the TAILDESC_PTR register causes the SG Engine to start fetching descriptors or restarts if it was idle (MCDMASR.Idle = 1). If it was not idle, writing to TAILDESC_PTR has no effect except to reposition the pause point. If the AXI MCDMA Channel MCDMACR.RS bit is set to 0, a write by the CPU to the TAILDESC_PTR register has no effect except to reposition the pause point.
5:0	RSVD	0	NA	

如果 IP 配置的地址宽度大于 32，请在 MSB 寄存器中指定 TD 的其余 MSB 位，如下所示。

表23：通道尾描述符（TD）寄存器（> 32 位）

Bits	Name	默认价值	访问	描述
31:0	尾描述符地址 (MSB)	0	R/W	指定当前描述符的地址。此寄存器仅在 Addr 为 > 32 位时使用。写入此注册会触发 BD 获取。

已处理数据包统计

此寄存器报告各自通道处理的数据包数量。这是一个16位的回转计数器。

表24：处理的数据包统计

Bits	Name	默认价值	访问	描述
31:0	RSVD	0	R	
15:0	数据包已处理计算	0	R	报告已处理的数据包数量通道。此计数器在达到后会回到0最大值 .

S2MM 通用控制寄存器 (0x500)

S2MM路径有一个控制寄存器用于控制MCDMA引擎。该寄存器允许您重置或将MCDMA置于运行模式。

表25：S2MM 通用控制寄存器 (0x500)

Bits	Name	默认价值	访问	描述
31:3	RSVD			
2	多通道多载波码分多址重置 (MCDMA.RST)	0	R/W	用于重置 AXI MCDMA 内核的软复位。设置此项将位设置为1会导致AXI MCDMA复位。复位是优雅地完成。待处理的命令/转账已刷新或完成。软重置完成后，所有寄存器和位都处于复位状态。 • 0 = 重置未进行。正常操作。 • 1 = 重置进行中。 这会重置所有通道并清除所有寄存器。在软重置后重新配置 MCDMA。正在重置 S2MM 也会重置 MM2S .
1	RSVD			

If the IP is configured for address width greater than 32, specify the remaining MSB bits of TD in MSB register as follows.

Table 23: **Channel Tail Descriptor (TD) Register (> 32 Bits)**

Bits	Name	Default Value	Access	Description
31:0	Tail descriptor address (MSB)	0	R/W	Specifies the address of the current descriptor. This register is used only when Addr is > 32 bits. Writing to this register triggers the BD fetch.

Packets Processed Statistics

This register reports the number of packets processed for the respective channel. This is a roll over counter of 16 bits.

Table 24: **Packets Processed Statistics**

Bits	Name	Default Value	Access	Description
31:0	RSVD	0	R	
15:0	Packet processed count	0	R	Reports the number of packets processed for the channel. This counter rolls over to 0 after reaching maximum value.

S2MM Common Control Register (0x500)

The S2MM path has a Control register to control the MCDMA engine. This register allows you to Reset or put the MCDMA in Run mode.

Table 25: **S2MM Common Control Register (0x500)**

Bits	Name	Default Value	Access	Description
31:3	RSVD			
2	Multichannel MCDMA Reset (MCDMA.RST)	0	R/W	Soft reset for resetting the AXI MCDMA core. Setting this bit to a 1 causes the AXI MCDMA to be reset. Reset is accomplished gracefully. Pending commands/transfers are flushed or completed. After completion of a soft reset, all registers and bits are in the Reset State. • 0 = Reset not in progress. Normal operation. • 1 = Reset in progress. This resets all the channels and clears all the registers. Re-configure the MCDMA after a soft reset. Resetting the S2MM also resets the MM2S.
1	RSVD			

表25：S2MM 通用控制寄存器 (0x500)（续）

Bits	Name	默认价值	访问	描述
0	多通道MCDMA RunStop (MCDMA.RS)	0	R/W	启动/停止多通道 S2MM MCDMA 通道。 • 0 = 停止 – 当电流（如果有的话）时，MCDMA 停止 MCDMA 操作已完成。用于散点聚集模式，待处理的命令/传输被清除或已完成。更新队列中的描述符是允许在完成更新到远程内存之前引擎停止。无法保证 S2MM AXI4 的数据完整性保证。MCDMA 状态中的停止位当 MCDMA 引擎时，寄存器断言为1已停止。此位由 AXI MCDMA 硬件清除当发生错误时，每通道进行软重置参数已被禁用。CPU也可以选择清除此位以停止 MCDMA 操作。来电当 MCDMA 处于停止模式时，数据包会被丢弃。 • 1 = 运行 – 启动 MCDMA 操作。停止位在当 MCDMA 状态寄存器撤消断言为 0 时 MCDMA 引擎开始运作。

S2MM 通用状态寄存器 (0x504)

S2MM 路径有一个公共状态寄存器用于跟踪 MCDMA 状态。该寄存器提供 MCDMA 引擎的整体状态。

表26：S2MM 通用状态寄存器 (0x504)

Bits	Name	默认价值	访问	描述
31:2	RSVD			
1	Idle	0	RO	MCDMA S2MM 空闲：指示 AXI MCDMA 的状态操作。当空闲时，它表示 SG 引擎已经到达所有通道和所有的尾指针排队的描述符已被处理。正在写入尾指针寄存器对任何通道自动重启 MCDMA 操作。 • 0 = 不闲置 . • 1 = 空闲.
0	停止 (MCDMA.已停止)	1	RO	MCDMA 停止：表示运行/停止状态 MCDMA。 • 0 = MCDMA 信道运行中。 • 1 = MCDMA.RS 位被设置为 0 . MCDMACR.RS 之间可能会有时间延迟 = 0 并且当 MCDMASR.停止 = 1 .

S2MM 通道启用/禁用寄存器 (0x508)

此寄存器允许您启用/禁用对特定通道的服务。

Table 25: **S2MM Common Control Register (0x500)** *(cont'd)*

Bits	Name	Default Value	Access	Description
0	Multichannel MCDMA RunStop (MCDMA.RS)	0	R/W	Start/Stop the Multichannel S2MM MCDMA channel. • 0 = Stop – MCDMA stops when current (if any) MCDMA operations are complete. For Scatter-Gather Mode, pending commands/transfers are flushed or completed. Descriptors in the update queue are allowed to finish updating to remote memory before engine halt. Data integrity on S2MM AXI4 cannot be guaranteed. The halted bit in the MCDMA Status register asserts to 1 when the MCDMA engine is halted. This bit is cleared by AXI MCDMA hardware when an error occurs and soft reset per channel parameter is disabled. The CPU can also choose to clear this bit to stop MCDMA operations. Incoming packets are dropped when MCDMA is in stop mode. • 1 = Run – Start MCDMA operations. The halted bit in the MCDMA Status register deasserts to 0 when the MCDMA engine begins operations.

S2MM Common Status Register (0x504)

The S2MM path has a Common Status register for tracking the MCDMA status. This register provides the overall status of the MCDMA engine.

Table 26: **S2MM Common Status Register (0x504)**

Bits	Name	Default Value	Access	Description
31:2	RSVD			
1	Idle	0	RO	MCDMA S2MM Idle: Indicates the state of AXI MCDMA operations. When IDLE, it indicates the SG Engine has reached the tail pointer for all the channels and all queued descriptors have been processed. Writing to the tail pointer register to any channel automatically restarts MCDMA operations. • 0 = Not Idle. • 1 = Idle.
0	Halted (MCDMA.Halted)	1	RO	MCDMA Halted: Indicates the run/stop state of the MCDMA. • 0 = MCDMA channel running. • 1 = MCDMA.RS bit is set to 0. There can be a delay of time between when MCDMACR.RS = 0 and when MCDMASR.Halted = 1.

S2MM Channel Enable/Disable Register (0x508)

This register allows you to enable/disable a particular channel from being serviced.

表27：S2MM通道启用/禁用寄存器（0x508）

Bits	Name	默认价值	访问	描述
31:16	保留	0	R	NA
15:0	通道启用	0x1	R/W	将某个位设置为1可以启用该通道的服务。每个位对应于一个通道。位 [0] 对应于一个通道与 TDEST = 0。Bit[1] 对应一个通道带有 TDEST = 1 等等 .

如果MCDMA在一个已禁用的通道上接收到数据包，整个数据包将被MCDMA引擎丢弃。此寄存器不会阻止通道的BD获取；它只会阻止特定通道被服务。此寄存器可以在任何时间进行编程，但只有在S2MM AXI4-Stream接口上没有数据存在或下一个数据包到达时才会生效。

注意：禁用通道不会禁用其中断行为。

S2MM 通道进行中寄存器 (0x50C)

该寄存器提供正在服务的通道ID的值。当MCDMA运行时，该值会根据正在服务的通道在运行时更新。在空闲状态下，该寄存器保存最后一个被服务的通道的值。

表28：S2MM通道进行中寄存器 (0x50C)

Bits	Name	默认价值	访问	描述
31:16	保留	0	R	NA
15:0	频道ID	0x0	R	这是上次服务的通道ID。这个寄存器有一个独热值来识别引起的通道每通道参数软重置时的错误是已禁用。例如，值为 1 对应于 TDEST = 0，值为2对应于TDEST = 1，而值为 4 对应于 TDEST = 2。

S2MM 错误寄存器 (0x510)

该寄存器提供 MCDMA 的错误状态。当 MCDMA 检测到任何通道的错误时，该寄存器会更新。该寄存器中的所有位都是只读的。

当每通道软复位参数被禁用（C_ENABLE_MULTI_CH_RESET = 0）：任何错误情况都会导致 AXI MCDMA 平稳停止（所有通道）。MCDMACR.RS 位被设置为 0，当引擎完全关闭时，MCDMASR.Halted 位被设置为 1。必须重置 MCDMA 才能清除错误，并且必须重新对所有通道进行编程。

Table 27: **S2MM Channel Enable/Disable Register (0x508)**

Bits	Name	Default Value	Access	Description
31:16	Reserved	0	R	NA
15:0	Channel Enable	0x1	R/W	Setting a bit to 1 enables the channel for service. Each bit corresponds to a channel. Bit [0] corresponds to a channel with TDEST = 0. Bit[1] corresponds to a channel with TDEST = 1 and so on.

If the MCDMA receives a packet on a disabled channel, the entire packet is dropped by the MCDMA engine. This register does not stop the BD fetch of the channel; it only stops a particular channel from being serviced. This register can be programmed at any time, but it comes into effect only when there is no data present on the S2MM AXI4-Stream interface or on arrival of the next packet.

Note: Disabling a channel does not disable its interrupt behavior.

S2MM Channel In Progress Register (0x50C)

This register gives the value of the Channel ID being serviced. When MCDMA is running, this value is updated at runtime based on the channel that is being serviced. In idle condition, this register holds the value of the last channel that was serviced.

Table 28: **S2MM Channel In Progress Register (0x50C)**

Bits	Name	Default Value	Access	Description
31:16	Reserved	0	R	NA
15:0	Channel ID	0x0	R	This is the channel ID that was last serviced. This register has a one-hot value to identify the channel that caused the error when soft reset per channel parameter is disabled. For example, a value of 1 corresponds to TDEST = 0, a value of 2 corresponds to TDEST = 1, and a value of 4 corresponds to TDEST = 2.

S2MM Error Register (0x510)

This register gives the error status of the MCDMA. This register is updated when MCDMA detects an error on any channel. All the bits in this register are RO.

When the soft reset per channel parameter is disabled (C_ENABLE_MULTI_CH_RESET = 0): Any error condition causes the AXI MCDMA to halt gracefully (all channels). The MCDMACR.RS bit is set to 0 and when the engine has completely shut down, the MCDMASR.Halted bit is set to 1. MCDMA has to be reset to clear the errors and the programming has to be done all over again (for all channels).

当启用每通道的软复位参数(C_ENABLE_MULTI_CH_RESET = 1)时：该通道的任何错误都会导致丢弃该通道的数据包，而已启用通道的其他数据包将继续处理。一旦错误通道被软复位并重新编程，IP将再次在该通道上开始工作。

表29：S2MM 错误寄存器 (0x510)

Bits	Name	默认价值	访问	描述
31:7	RSVD			
6	SG解码错误	0	RO	散射聚合解码错误：如果发生此错误 CURDESC_PTR和/或NXTDESC_PTR指向无效 地址 · • 0 = 无 SG 解码错误 . • 1 = SG 检测到解码错误。MCDMA 引擎停止。 此错误无法记录到描述符中。
5	SGS级别错误	0	R0	分散聚集从属错误：如果从属出现此错误，会发生此情况 从内存映射接口读取会发出一个从设备 错误 · • 0 = 无 SG 从属错误 . • 1 = SG检测到从属错误。MCDMA引擎停止。 此错误无法记录到描述符中。
4	SG整数错误	0	RO	Scatter Gather 内部错误：如果发生以下情况，将出现此错误 带有已设置完成位的描述符已被获取。 这向 SG 引擎表明该描述符是尾部 描述符。 • 0 = 无 SG 内部错误 . • 1 = 检测到SG内部错误。此错误无法 已登录到描述符。
3	RSVD			
2	DMA 数据传输错误	0	RO	MCDMA 解码错误：如果地址出现问题，将会发生此错误 请求指向无效地址。 • 0 = 无MCDMA解码错误 . • 1 = 检测到MCDMA解码错误。此位可以被设置 当这样的事件在任何一个频道上发生时。
1	DMA SLv 错误	0	RO	MCDMA 从设备错误：如果从设备读取时发生此错误 从内存映射接口发出从属错误。 • 0 = 无 MCDMA 从属错误 . • 检测到 1 = MCDMA 从属错误。此位可以被设置 当这样的事件在任何一个频道上发生时。
0	DMA 内部错误	0	RO	MCDMA 内部错误：如果缓冲区出现问题，会发生此错误 在获取的描述符中指定的长度被设置为0。同时， 在使用状态应用时处于散点聚集模式 长度字段，当 Status AXI4- 时发生此错误 流数据包 RxLength 字段与 S2MM 不匹配 数据包正在被 S_AXIS_S2MM 接口接收。 • 0 = 无 MCDMA 内部错误 . • 检测到 1 = MCDMA 内部错误。该位已被设置 当这样的事件在任何一个频道上发生时。

When the soft reset per channel parameter is enabled(C_ENABLE_MULTI_CH_RESET = 1): Any error in channel results in dropping the packets of that particular channel and rest of the packets of enabled channels are progressed. Once the error channel is soft reset and re-programmed, the IP starts to operate on that channel again.

Table 29: **S2MM Error Register (0x510)**

Bits	Name	Default Value	Access	Description
31:7	RSVD			
6	SGDecErr	0	RO	Scatter Gather Decode Error: This error occurs if CURDESC_PTR and/or NXTDESC_PTR point to an invalid address. • 0 = No SG Decode Errors. • 1 = SG Decode Error detected. MCDMA Engine halts. This error cannot be logged into the descriptor.
5	SGSlvErr	0	R0	Scatter Gather Slave Error: This error occurs if the slave read from on the Memory Map interface issues a Slave Error. • 0 = No SG Slave Errors. • 1 = SG Slave Error detected. MCDMA Engine halts. This error cannot be logged into the descriptor.
4	SGIntErr	0	RO	Scatter Gather Internal Error: This error occurs if a descriptor with the Complete bit already set is fetched. This indicates to the SG Engine that the descriptor is a tail descriptor. • 0 = No SG Internal Errors. • 1 = SG Internal Error detected. This error cannot be logged into the descriptor.
3	RSVD			
2	DMA Dec Err	0	RO	MCDMA Decode Error: This error occurs if the address request points to an invalid address. • 0 = No MCDMA Decode Errors. • 1 = MCDMA Decode Error detected. This bit can be set when such an event occurs on any of the channels.
1	DMA SLv Err	0	RO	MCDMA Slave Error: This error occurs if the slave read from the Memory Map interface issues a Slave Error. • 0 = No MCDMA Slave Errors. • 1 = MCDMA Slave Error detected. This bit can be set when such an event occurs on any of the channels.
0	DMA Intr Err	0	RO	MCDMA Internal Error: This error occurs if the buffer length specified in the fetched descriptor is set to 0. Also, when in Scatter Gather Mode and using the status app length field, this error occurs when the Status AXI4-Stream packet RxLength field does not match the S2MM packet being received by the S_AXIS_S2MM interface. • 0 = No MCDMA Internal Errors. • 1 = MCDMA Internal Error detected. This bit is set when such an event occurs on any of the channels.

S2MM 数据包丢失状态 (0x514)

该寄存器报告所有通道丢弃的数据包数量。当 MCDMA 被置于运行模式时，该寄存器会增加。

表30：S2MM数据包丢失状态 (0x514)

Bits	Name	默认价值	访问	描述
31:0	丢包计数	0	R	报告所有数据包丢失的数量 通道。每当一个数据包时，该值增加1 被投放到任何频道。计数器会循环 在达到最大值之后 .

S2MM通道完成寄存器 (0x518)

该寄存器报告了在特定时间点被服务的通道，有助于识别接收数据包的通道。

表31：S2MM 通道完成寄存器 (0x518)

Bits	Name	默认价值	访问	描述
31:16	保留	0	R	NA
15:0	频道ID	0	RC	这是已提供服务的渠道。此登记处 识别所有已处理的通道。位 0 到 15 分别对应 TDEST 值 0 到 15。 该寄存器在读取时会被清除。

例如，如果 MCDMA 在 CH1、CH2、CH4 上接收并处理数据包，而在 CH3 上丢弃所有数据包，则该寄存器的值设置为 0000000000001011。

S2M M AWCACHE 和 AWUSER 寄存器 (0x51) C)

该寄存器用于编程应在AXI4写接口（S2MM映射接口）的`awuser` 和`awcache` 端口上驱动的值。在MCDMA运行时不应修改此寄存器。

表32：S2MM AWCACHE 和 AWUSER 寄存器 (0x51C)

Bits	Name	默认价值	访问	描述
31:16	保留	0	R	NA
十五十二	保留	0	RW	未使用
11:8	Awuser 值	0	RW	编程设置所需的 awuser 值。
7:4	保留	0	RW	未使用

S2MM Packet Drop Status (0x514)

This register reports the number of packets dropped across all channels. This register is incremented when the MCDMA is put in run mode.

Table 30: **S2MM Packet drop Status (0x514)**

Bits	Name	Default Value	Access	Description
31:0	Packet drop count	0	R	Reports the number of packets dropped across all channels. This value increments by 1 every time a packet is dropped on any channel. The counter wraps around after it has reached maximum value.

S2MM Channels Completed Register (0x518)

This register reports the channels that were serviced at a given instance of time, helping in identifying the channels that received the packets.

Table 31: **S2MM Channels Completed Register (0x518)**

Bits	Name	Default Value	Access	Description
31:16	Reserved	0	R	NA
15:0	Channel ID	0	RC	This is the channel that was serviced. This register identifies all the channels that were processed. Bits 0 to 15 correspond to TDEST values of 0 to 15, respectively. This register is cleared on read.

For example, if MCDMA receives and processes packets on CH1, CH2, CH4 and drops all the packets on CH3, this register has a value of 0000000000001011 set.

S2MM AWCACHE and AWUSER Register (0x51C)

This register is used to program the value that should be driven on `awuser` and `awcache` ports of the AXI4 write interface (S2MM Map Interface). This register should not be modified while the MCDMA is operating.

Table 32: **S2MM AWCACHE and AWUSER Register (0x51C)**

Bits	Name	Default Value	Access	Description
31:16	Reserved	0	R	NA
15:12	Reserved	0	RW	Unused
11:8	Awuser value	0	RW	Program the desired awuser value.
7:4	Reserved	0	RW	Unused

表32：S2MM AWCACHE 和 AWUSER 寄存器 (0x51C)（续）

Bits	Name	默认价值	访问	描述
3:0	Awcache 值	0x3	RW	编程设置所需的 awcache 值。

S2MM 通道中断监控寄存器 (0x520)

该寄存器提供有关哪个通道产生中断的信息。当 MCDMA 的所有中断输出在系统级被 OR 处理时，可以使用该寄存器来识别产生中断的通道。在识别出通道后，您应读取相应通道的状态寄存器，以获取有关中断原因的更多信息。

表33：S2MM通道中断监控寄存器（0x520）

Bits	Name	默认价值	访问	描述
31:16	保留	0	R	NA
15:0	频道ID	0	R	这提供有关产生该信息的频道的信息 中断。该寄存器具有一个一热值来识别 产生中断的通道。例如， 值1对应于通道0，值2 对应于通道 1，值为 4 对应 到2频道 . 当相应的位时，比特会被自动清除 中断在通道状态寄存器中被清除。

S2MM 通道观察器组 1-6 寄存器 (0x940–0x954)

这些寄存器提供有关根据通道分组（在 IP 配置时完成）被服务的通道的信息。这些寄存器是寄存器 0x518 的子集。读取时，这些寄存器会被清除。

表34：S2MM通道观察器第1-6组寄存器 (0x940–0x954)

Bits	Name	默认价值	访问	描述
31:16	保留	0	R	NA
15:0	频道ID	0	RC	这是已经维修的通道。此注册表有一个 用于识别已处理通道的独热值。 例如，值为 1 对应于 TDEST = 0，a 值为2对应于TDEST = 1，值为4 对应 TDEST = 2。 该寄存器在读取时会被清除。

Table 32: **S2MM AWCACHE and AWUSER Register (0x51C)** *(cont'd)*

Bits	Name	Default Value	Access	Description
3:0	Awcache value	0x3	RW	Program the desired awcache value.

S2MM Channel Interrupt Monitor Register (0x520)

This register gives information about which channels generated the interrupt. This register can be used to identify the channel(s) that generated an interrupt when all the interrupt outputs of MCDMA are ORed at the system level. After the channels are identified, you should read the Status register of the corresponding channel to get more information about the interrupt cause.

Table 33: **S2MM Channel Interrupt Monitor Register (0x520)**

Bits	Name	Default Value	Access	Description
31:16	Reserved	0	R	NA
15:0	Channel ID	0	R	This gives info about the channel(s) that generated the interrupt. This register has a one-hot value to identify the channel(s) that generated the interrupt. For example, a value of 1 corresponds to Channel 0, a value of 2 corresponds to Channel 1, and a value of 4 corresponds to Channel 2. Bits are automatically cleared when the corresponding interrupt is cleared in the channel status register.

S2MM Channel Observer Group 1-6 Registers (0x940–0x954)

These registers give the information about which channel(s) were serviced based on the grouping of the channels done (at IP configuration). These registers are subsets of register 0x518. These registers are cleared on read.

Table 34: **S2MM Channel Observer Group 1-6 Registers (0x940–0x954)**

Bits	Name	Default Value	Access	Description
31:16	Reserved	0	R	NA
15:0	Channel ID	0	RC	This is the channel that was serviced. This register has a one-hot value to identify the channel that was processed. For example, a value of 1 corresponds to TDEST = 0, a value of 2 corresponds to TDEST = 1, and a value of 4 corresponds to TDEST = 2. This register is cleared on read.

如果在 IP 定制时，第 1 组被分配给通道 0、3 和 5，寄存器 0x940 仅显示这些通道的状态。如果通道 0、1、2、3、4 和 5 都被服务过，则该寄存器包含值 000000000101001。

这个寄存器在多核（观察者）系统中非常有用，其中MCDMA是所有核心共享的资源。MCDMA IP最多支持六个核心，每个核心可以静态配置分配16个通道。每个组都有一个通道观察者寄存器，用于提供该组中正在服务的通道的状态信息。

注意：每个通道都存在以下一组寄存器。

通道控制寄存器

每个通道　它有自己的控制寄存器，可以控制各个通道。

表35：通道控制寄存器

Bits	Name	默认价值	访问	描述
31:24	中断延迟	0	R/W	中断延迟超时：此值用于设置中断超时时间。中断超时是一个使 MCDMA 引擎产生的机制在延迟时间段结束后发生的中断。计时器在数据包结束时开始计数并重置在收到新数据包或发生超时事件时发生。该计数器在运行的时钟上工作连接到Scatter Gather时钟端口。延迟计数器每经过125个时钟减一。 注意：将此值设置为零会禁用延迟定时器打断。
二十三一六	IRQ 阈值	0x1	R/W	中断阈值：该值用于设置中断阈值。当IOC中断事件发生时，内部计数器从中断开始递减阈值设置。当计数达到零时，中断输出由 MCDMA 引擎生成。 注意：阈值的最小设置为 0x01。A 向此寄存器写入 0x00 没有任何效果。
15:8	IRQ 数据包丢失门槛	0x1	R/W	数据包丢弃中断阈值：此值用于设置数据包丢失的中断阈值。当一个数据包在通道上被丢弃，内部计数器从此阈值设置开始倒计时。当计数到零时，由…产生一个中断输出 MCDMA 引擎。此值会在每次...时递减通道上发生数据包丢失事件。 注意：阈值的最小设置为 0x01。A 向此寄存器写入 0x00 没有任何效果。
7	错误 请求中断启用	0	R/W	错误中断使能：当设置为1时，它允许错误事件生成中断输出。 • 0 = 错误中断已禁用。 • 1 = 错误中断已启用。

If at IP customization, Group 1 was allocated for Channels 0, 3, and 5, register 0x940 displays the status only for those channels. If Channels 0, 1, 2, 3, 4, and 5 were serviced, this register contains a value of 000000000101001.

This register is useful in a multi-core (Observer) system where MCDMA is a shared resource for all cores. MCDMA IP support a maximum of six cores and 16 Channels can be distributed across each core as a static configuration. The Channel Observer register is available for each group and provides the status about the channels in a group being serviced.

Note: The following set of registers are present per channel.

Channel Control Register

Each channel has its own Control register, which provides control over individual channels.

Table 35: **Channel Control Register**

Bits	Name	Default Value	Access	Description
31:24	IRQ DELAY	0	R/W	Interrupt Delay Time Out: This value is used for setting the interrupt timeout value. The interrupt timeout is a mechanism for causing the MCDMA engine to generate an interrupt after the delay time period has expired. The timer begins counting at the end of a packet and resets with the receipt of a new packet or a timeout event occurs. This counter operates on the clock that is connected to the Scatter Gather clock port. The delay counter is decremented once every 125 clocks. ***Note:*** Setting this value to zero disables the delay timer interrupt.
23:16	IRQ Threshold	0x1	R/W	Interrupt Threshold: This value is used for setting the interrupt threshold. When IOC interrupt events occur, an internal counter counts down from the Interrupt Threshold setting. When the count reaches zero, an interrupt out is generated by the MCDMA engine. ***Note:*** The minimum setting for the threshold is 0x01. A write of 0x00 to this register has no effect.
15:8	IRQ Packet Drop Threshold	0x1	R/W	Packet Drop Interrupt Threshold: This value is used for setting the interrupt threshold for a packet drop. When a packet is dropped on a channel, an internal counter counts down from this threshold setting. When the count reaches zero, an interrupt out is generated by the MCDMA engine. This value is decremented for every packet drop event occurring on a channel. ***Note:*** The minimum setting for the threshold is 0x01. A write of 0x00 to this register has no effect.
7	Err Irq En	0	R/W	Interrupt on Error Interrupt Enable: When set to 1, it allows error events to generate an interrupt out. • 0 = Error Interrupt disabled. • 1 = Error Interrupt enabled.

表35：通道控制寄存器（续）

Bits	Name	默认价值	访问	描述
6	DlyIrqEn	0	R/W	延时定时器中断使能：当设置为1时，它允许错误事件产生一个中断输出。 • 0 = 延迟中断已禁用。 • 1 = 延迟中断已启用。
5	IOC_中断使能	0	R/W	完成中断使能：设置为1时，它允许完成时生成中断事件为设置了 Complete 位的描述符输出中断。 • 0 = IOC 中断已禁用。 • 1 = IOC 中断已启用。
4	Pktdrop_中断使能	0	R/W	数据包丢失中断使能：设置为1时，允许通道的数据包丢失中断。
3	在其他 En_ _上出错	0	R/W	在其他通道出错时中断使能。设置为 1 时，它允许其他通道上的错误事件生成一个中断输出。 • 0 = 中断已禁用。 • 1 = 中断已启用。
2:1	RSVD	0		
2	软重置 Ch_ _	0	R/W	当每通道进行软重置时，S2MM 通道的软重置参数已启用。软复位位可以在...时清除通道状态寄存器中的停止完成位已被设置。
1	RSVD			
0	频道 运行停止 (CH.RS)	0	R/W	开始/停止获取此频道的BDs。 设置为1后，该位不应设置为0。设置此在 MCDMA 运行模式下将位设为 0 会导致未定义行为 .

通道状态寄存器

每个通道都有自己的状态寄存器，提供该通道的状态。

表36：通道状态寄存器

Bits	Name	默认价值	访问	描述
31:24	IRQ 延迟状态	0	R	中断延迟时间状态：表示当前中断延迟时间值。
二十三 一十六	IRQ 阈值状态	0x1	R	中断阈值状态：指示当前中断阈值 .
15:8	IRQ 数据包丢失状态	0x1	R	中断数据包丢弃阈值：指示当前中断阈值。

Table 35: **Channel Control Register** *(cont'd)*

Bits	Name	Default Value	Access	Description
6	DlyIrqEn	0	R/W	Interrupt on Delay Timer Interrupt Enable: When set to 1, it allows error events to generate an interrupt out. • 0 = Delay Interrupt disabled. • 1 = Delay Interrupt enabled.
5	IOC_IrqEn	0	R/W	Interrupt on Complete Interrupt Enable: When set to 1, it allows Interrupt On Complete events to generate an interrupt out for descriptors with the Complete bit set. • 0 = IOC Interrupt disabled. • 1 = IOC Interrupt enabled.
4	Pktdrop_IrqEn	0	R/W	Interrupt on Packet drop enable: When set to 1, it allows an Interrupt on Packet drop for a channel.
3	Err_on_other En	0	R/W	Interrupt on Error on other channels Interrupt Enable. When set to 1, it allows error events on other channels to generate an interrupt out. • 0 = Interrupt disabled. • 1 = Interrupt enabled.
2:1	RSVD	0		
2	Soft_reset_Ch	0	R/W	Soft Reset for S2MM Channel when soft reset per channel parameter is enabled. Soft reset bit can be cleared when halt complete bit is set in channel status register.
1	RSVD			
0	CHANNEL. RunStop (CH.RS)	0	R/W	Start/Stop the fetch of BDs for this channel. After set to 1, this bit should not be set to 0. Setting this bit to 0 while the MCDMA is in run mode results in undefined behavior.

Channel Status Register

Each channel has its own Status register, providing the status the channel.

Table 36: **Channel Status Register**

Bits	Name	Default Value	Access	Description
31:24	IRQ DELAY Status	0	R	Interrupt delay time Status: Indicates current interrupt delay time value.
23:16	IRQ Threshold Status	0x1	R	Interrupt Threshold Status: Indicates current interrupt threshold value.
15:8	IRQ Packet Drop Status	0x1	R	Interrupt Packet Drop Threshold: Indicates current interrupt threshold value.

表 36：通道状态寄存器（续）

Bits	Name	默认价值	访问	描述
7	错误 中断	0	R/WC	出错中断。设置为1时，表示触发中断 如果对应位发生错误，则会生成事件 控制寄存器已启用 (Err_IrqEn = 1)，一次中断 输出是由 AXI MCDMA 生成的。 当启用每通道参数的软复位时，这个 位可以通过通道软复位或整个系统清除 重置。当每通道的软重置被禁用时， MCDMA必须在任何错误情况发生时重置 频道 ·
6	DlyIrq	0	R/WC	延迟中断：设置为1时，表示一个中断 事件是在延迟定时器超时后生成的。如果 控制寄存器中的相应位已被启用 (Dly_IrqEn = 1)，从 AXI 生成一个中断输出 多用户码分多址 . • 0 = 无延迟中断。 • 1 = 检测到延迟中断。 向这个位写入1会清除它。
5	IOC_中断	0	R/WC	完成时中断：当设置为1时，会触发中断事件 是在完成描述符时生成的。这种情况发生在 对于设置了 EOF 位的描述符。如果相应的 控制寄存器中的位被启用（IOC_IrqEn = 1）并且如果 中断阈值已达到，它会导致一个 中断将由 AXI MCDMA 生成。 • 0 = 没有 IOC 中断。 • 1 = 检测到IOC中断。 向这个位写入1会清除它。
4	Pktdrop_irq	0	R/WC	数据包丢失时中断：当设置为1时，表示一个 在数据包丢失时生成了中断事件。如果 控制寄存器中的对应位被启用 (PktDrp_IrqEn = 1) 并且如果中断阈值已经 满足，会导致从…生成中断输出 AXI 多通道 DMA . • 0 = 没有数据包丢失中断。 • 1 = 检测到数据包丢失中断。 向这个位写入1会清除它。
3	错误_在_其他_ch_irq	0	R/WC	在其他通道出现错误时中断：设置为1时，它 表示在发生错误时生成了中断事件 在其他通道上。如果控制中的相应位 寄存器已启用（Err_在_其他 En = 1上），一个中断输出 是由 AXI MCDMA 生成的。 向这个位写入1会清除它。
2	RSVD			
2	停止_完成_ch	0	RO	在重置 S2MM 通道期间完成停止。将会是 在软重置完成时启用，并且可以进行软重置 在设置此位后被禁用 . 当此位为0时清除软复位可能导致 不良行为 .

Table 36: **Channel Status Register** *(cont'd)*

Bits	Name	Default Value	Access	Description
7	Err Irq	0	R/WC	Interrupt on Error. When set to 1, indicates an interrupt event was generated on an error in corresponding bit if the control register is enabled (Err_IrqEn = 1), an interrupt out is generated from AXI MCDMA. When soft reset per channel parameter is enabled, this bit can be cleared by channel soft reset or whole system reset. When soft reset per channel is disabled , the MCDMA has to be reset for error scenarios on any channel.
6	DlyIrq	0	R/WC	Interrupt on Delay: When set to 1, it indicates an interrupt event was generated on delay timer timeout. If the corresponding bit in Control register is enabled (Dly_IrqEn = 1), an interrupt out is generated from the AXI MCDMA. • 0 = No Delay Interrupt. • 1 = Delay Interrupt detected. Writing a 1 to this bit clears it.
5	IOC_Irq	0	R/WC	Interrupt on Complete: When set to 1, an interrupt event was generated on completion of a descriptor. This occurs for descriptors with the EOF bit set. If the corresponding bit in the Control register is enabled (IOC_IrqEn = 1) and if the interrupt threshold has been met, it causes an interrupt out to be generated from the AXI MCDMA. • 0 = No IOC Interrupt. • 1 = IOC Interrupt detected. Writing a 1 to this bit clears it.
4	Pktdrop_irq	0	R/WC	Interrupt on packet drop: When set to 1, it indicates an interrupt event was generated on packet drop. If the corresponding bit in the Control register is enabled (PktDrp_IrqEn = 1) and if the interrupt threshold has been met, causes an interrupt out to be generated from the AXI MCDMA. • 0 = No packet drop Interrupt. • 1 = Packet drop Interrupt detected. Writing a 1 to this bit clears it.
3	Err_on_other_ch_irq	0	R/WC	Interrupt on Error on other channels: When set to 1, it indicates an interrupt event was generated on an error on other channels. If the corresponding bit in Control register is enabled (Err_on_other En = 1), an interrupt out is generated from the AXI MCDMA. Writing a 1 to this bit clears it.
2	RSVD			
2	HALT_Complete_ch	0	RO	Halt Complete During reset S2MM channel. Will be enabled when soft reset is complete and soft reset can be disabled after this bit is set. Clearing soft reset when this bit is 0 might result in undesired behavior.

表 36：通道状态寄存器（续）

Bits	Name	默认价值	访问	描述
1	BD 短缺	0	RO	当数据包正在被处理时，将设置此位，并且 BD 队列变为空。这意味着数据包正在维修的过大，无法容纳 BD 队列。此情景导致 MCDMA 等待要花很长时间才能完成数据包。为了克服这个问题，扩展 BD 链并编程 TD 以获取更多 BDs。这不会导致数据包丢失。 当 MCDMA 正在时，此位也可以瞬时被设置为一个渠道提供最后的BD服务并进行调整数据包。在最后接收 TLAST 后 BD, 这一位未设置 .
0	空闲（队列为空）	1	RO	MCDMA 信道空闲：表示 SG 引擎已到达了相关通道的尾指针及所有排队的描述符已经被处理。这意味着 BD 队列为空，并且没有更多的 BD 可用过程。写入尾指针寄存器会自动重新启动 BD 获取操作。 • 0 = BD 队列不为空。 • 1 = BD 队列为空。 如果在此位被设置时数据包到达，数据包将被掉了。

通道电流描述寄存器

每个通道都有其自己的电流描述符寄存器。

表 37：通道电流描述符（CD）寄存器

Bits	Name	默认价值	访问	描述
31:6	当前描述符地址	0	可读写，只读	指定当前描述符的地址。该值一旦通道进入运行模式，就无法更新。 当 CH.RS 为 1 时，CURDESC_PTR 变为只读 (RO)。当 MCDMA 引擎运行时 (MCDMA.RS=1)，CURDESC_PTR 寄存器由 AXI MCDMA 更新为指示当前正在处理的描述符。开启错误检测，CURDESC_PTR 已更新以反映与检测到的错误相关的描述符
5:0	RSVD	0	NA	

如果IP配置的地址宽度大于32，请在MSB寄存器中指定CD的其余最高有效位，如下所示。

Table 36: **Channel Status Register** *(cont'd)*

Bits	Name	Default Value	Access	Description
1	BD ShortFall	0	RO	This bit is set when a packet is being processed and the BD queue becomes empty. This means that the packet that is being serviced is too large to be accommodated in the BD queue. This scenario leads to MCDMA waiting forever for the packet to get completed. To get over this, extend the BD chain and program the TD to fetch more BDs. This does not result in a packet drop. This bit can also get set momentarily when the MCDMA is servicing the last BD for a channel and accommodates the packet. After the TLAST is accommodated in the last BD, this bit is unset.
0	Idle (Queue Empty)	1	RO	MCDMA Channel Idle: Indicates the SG Engine has reached the tail pointer for the associated channel and all queued descriptors have been processed. This means that the BD queue is empty and there are no more BDs to process. Writing to the tail pointer register automatically restarts the BD fetch operations. • 0 = BD queue not empty. • 1 = BD Queue empty. If the packet arrives while this bit is set, the packet is dropped.

Channel Current Descriptor Registers

Each channel has its own Current Descriptor registers.

Table 37: **Channel Current Descriptor (CD) Registers**

Bits	Name	Default Value	Access	Description
31:6	Current descriptor address	0	R/W, RO	Specifies the address of the current descriptor. This value cannot be updated once the Channel is put in run mode. When CH.RS is 1, CURDESC_PTR becomes Read Only (RO). When the MCDMA Engine is running (MCDMA.RS=1), CURDESC_PTR register is updated by AXI MCDMA to indicate current descriptor that is being worked on. On error detection, CURDESC_PTR is updated to reflect the descriptor associated with the detected error
5:0	RSVD	0	NA	

If the IP is configured for address width greater than 32, specify the remaining MSB bits of CD in the MSB register as follows.

表38：通道电流描述符 (CD) 寄存器（> 32 位）

Bits	Name	默认值	访问	描述
31:0	当前描述符 地址（最高有效位）	0	R/W	指定地址 当前的 描述符。这 寄存器仅用于 当地址为 > 32 位时 . 此值无效 更新于之后 MCDMA 已启动 mode.

通道尾描述符寄存器

每个通道都有其自己的尾部描述符寄存器。

表 39：通道尾描述符（TD）寄存器

Bits	Name	默认 价值	访问	描述
31:6	尾描述符地址	0	R/W	指定尾部描述符的地址。此值可以 在 MCDMA 运行时可以更新。写入此内容 注册会触发 BD 获取。 指示描述符链中的暂停指针。SG 引擎在完成后暂停描述符获取 对当前描述符的描述符进行的操作 指针与尾部描述符指针匹配。当 AXI MCDMA 通道被置于运行模式 (CH.RS = 1)，一次写入 由 CPU 写入 TAILDESC_PTR 寄存器会导致 SG 引擎开始获取描述符，如果处于空闲状态则重启 （CH = 1）。如果它没有闲置，写入 TAILDESC_PTR 没有 除了重新定位暂停点外没有效果。如果 AXI MCDMA 通道 CH.RS 位被设置为 0，由 CPU 写入 对 TAILDESC_PTR 寄存器没有影响，除了 重新定位暂停点。
5:0	RSVD	0	NA	

如果IP配置的地址宽度大于32，请在MSB寄存器中指定TD的其余最高有效位，如下所示。

表40：通道尾描述符（TD）寄存器（> 32 位）

Bits	Name	默认 价值	访问	描述
31:0	尾描述符地址 (MSB)	0	R/W	指定当前描述符的地址。这个 寄存器仅在地址为 > 32 位时使用。 当此寄存器更新时，将触发 BD 获取。

数据包丢失统计

该寄存器报告跨通道丢弃的数据包数量。

Table 38: **Channel Current Descriptor (CD) Registers (> 32 Bits)**

Bits	Name	Default Value	Access	Description
31:0	Current descriptor address (MSB)	0	R/W	Specifies the address of the current descriptor. This register is used only when Addr is > 32 bits. This value cannot be updated after the MCDMA is put in run mode.

Channel Tail Descriptor Register

Each channel has its own Tail Descriptor registers.

Table 39: **Channel Tail Descriptor (TD) Register**

Bits	Name	Default Value	Access	Description
31:6	Tail descriptor address	0	R/W	Specifies the address of the Tail descriptor. This value can be updated while the MCDMA is running. Writing into this register triggers the BD fetch. Indicates the pause pointer in a descriptor chain. The SG Engine pauses descriptor fetching after completing operations on the descriptor whose current descriptor pointer matches the tail descriptor pointer. When AXI MCDMA Channel is put in run mode (CH.RS = 1), a write by the CPU to the TAILDESC_PTR register causes the SG Engine to start fetching descriptors or restart if it was idle (CH = 1). If it was not idle, writing to TAILDESC_PTR has no effect except to reposition the pause point. If the AXI MCDMA Channel CH.RS bit is set to 0, a write by the CPU to the TAILDESC_PTR register has no effect except to reposition the pause point.
5:0	RSVD	0	NA	

If the IP is configured for an address width greater than 32, specify the remaining MSB bits of TD in MSB register as follows.

Table 40: **Channel Tail Descriptor (TD) Register (> 32 Bits)**

Bits	Name	Default Value	Access	Description
31:0	Tail descriptor address (MSB)	0	R/W	Specifies the address of the current descriptor. This register is used only when Addr is > 32 bits. BD fetch is triggered when this register is updated.

Packet Drop Statistic

This register reports the number of packets dropped across the channel.

表 41：数据包丢失统计

Bits	Name	默认价值	访问	描述
31:0	RSVD	0	R	
15:0	丢包计数	0	RC	报告该通道丢弃的数据包数量。 每当一个数据包被处理时，该值就增加 1 下降。计数器在达到后会回绕 最大值。读取时此寄存器会被清零。

已处理数据包统计

此寄存器报告各自通道处理的数据包数量。这是一个16位的回转计数器。

表42：处理的数据包统计

Bits	Name	默认价值	访问	描述
31:0	RSVD	0	R	
15:0	数据包已处理 计算	0	R	报告已处理的数据包数量 通道。此计数器在达到后会回到0 最大值 .

SG 缓存/用户寄存器 (0x4B0)

编程此寄存器以设置 SG AXI4 接口的 `arcache`、 `aruser`、 `awcache` 和 `awuser` 端口的所需值。在 MCDMA 运行时不应编程此寄存器。

表43：SG 缓存/用户寄存器 (0x4B0)

Bits	Name	默认价值	访问	描述
31:28	保留	0	RW	未使用。
27:24	Awuser 值	0	RW	编程设置所需的 awuser 值。
二十三二十	保留	0	RW	未使用。
一九一六	Awcache 值	0x3	RW	编程设置所需的 awcache 值。
十五十二	保留	0	RW	未使用。
11:8	Aruser 值	0	RW	编程设置所需的 aruser 值。
7:4	保留	0	RW	未使用
3:0	Arcache 值	0x3	RW	编程设置所需的arcache值。

Table 41: **Packet Drop Statistic**

Bits	Name	Default Value	Access	Description
31:0	RSVD	0	R	
15:0	Packet drop count	0	RC	Reports the number of packets dropped for the channel. This value increments by 1 every time a packet is dropped. The counter wraps around after it has reached maximum value. This register is cleared when read.

Packets Processed Statistics

This register reports the number of packets processed for the respective channel. This is a roll over counter of 16 bits.

Table 42: **Packets Processed Statistics**

Bits	Name	Default Value	Access	Description
31:0	RSVD	0	R	
15:0	Packet processed count	0	R	Reports the number of packets processed for the channel. This counter rolls over to 0 after reaching maximum value.

SG Cache/User Register (0x4B0)

Program this register to set the desired value for the `arcache`, `aruser`, `awcache`, and `awuser` ports of the SG AXI4 interface. This register should not be programmed while the MCDMA is in operation.

Table 43: **SG Cache/User Register (0x4B0)**

Bits	Name	Default Value	Access	Description
31:28	Reserved	0	RW	Unused.
27:24	Awuser value	0	RW	Program the desired awuser value.
23:20	Reserved	0	RW	Unused.
19:16	Awcache value	0x3	RW	Program the desired awcache value.
15:12	Reserved	0	RW	Unused.
11:8	Aruser value	0	RW	Program the desired aruser value.
7:4	Reserved	0	RW	Unused
3:0	Arcache value	0x3	RW	Program the desired arcache value.

散布聚集缓冲描述符

本节定义了 AXI MCDMA 的 S2MM（接收）和 MM2S（发送）散点收集描述符的字段。该描述符由八个 32 位的基本字和 0 或 5 个用户应用字组成。该描述符未来将支持 64 位地址以及用户应用数据。通过帧起始和帧结束标志支持每个数据包的多个描述符。缓冲区长度可以描述每个描述符最多 67,108,863 字节的数据缓冲区。每个通道应为 MM2S 和 S2MM 保持独立的 BD 链。

表44：MM2S BD字段说明

地址偏移	Name	描述
0x00	下一个描述符	下一个描述符指针
0x04	下一个描述符（最高有效位）	MSB（32位）下一个描述符指针
0x08	缓冲区地址	缓冲区描述符地址
0x0C	缓冲区地址（最高有效字节）	MSB（32位）缓冲区描述符地址
0x10	RSVD	保留
0x14	控制	BD的控制信息
0x18	控制边带	AXI4-Stream 边带的控制信息
0x1C	状态	状态字段
0x20	APP0	用户应用领域 0
0x24	APP1	用户应用领域 1
0x28	APP2	用户应用领域 2
0x2C	APP3	用户应用领域 3
0x30	APP4	用户应用领域 4

表45：S2MM BD字段说明

地址偏移	Name	描述
0x00	下一个描述符	下一个描述符指针
0x04	下一个描述符（最高有效位）	MSB（32位）下一个描述符指针
0x08	缓冲区地址	缓冲区描述符地址
0x0C	缓冲区地址（最高有效字节）	MSB（32位）缓冲区描述符地址
0x10	RSVD	保留
0x14	控制	控制信息字段
0x18	状态	状态字段
0x1C	旁带状态	边带信号的状态
0x20	APP0	用户应用领域 0
0x24	APP1	用户应用领域 1
0x28	APP2	用户应用领域 2
0x2C	APP3	用户应用领域 3

Scatter Gather Buffer Descriptor

This section defines the fields of the S2MM (Receive) and MM2S (Transmit) Scatter Gather Descriptors for AXI MCDMA. The descriptor is made up of eight 32-bit base words and 0 or 5 user application words. The descriptor has future support for 64-bit addresses and support for user application data. Multiple descriptors per packet are supported through the Start of Frame and End of Frame flags. The Buffer Length can describe up to 67,108,863 bytes of data buffer per descriptor. Each channel should maintain a separate BD chain for MM2S and S2MM.

Table 44: **MM2S BD Field Description**

Address Offset	Name	Description
0x00	Next Descriptor	Next descriptor pointer
0x04	Next Descriptor (MSB)	MSB (32 bits) next descriptor pointer
0x08	Buffer Address	Buffer descriptor address
0x0C	Buffer Address (MSB)	MSB (32bits) buffer descriptor address
0x10	RSVD	Reserved
0x14	Control	Control Information for BD
0x18	Control Sideband	Control Information for AXI4-Stream Sideband
0x1C	Status	Status field
0x20	APP0	User application field 0
0x24	APP1	User application field 1
0x28	APP2	User application field 2
0x2C	APP3	User application field 3
0x30	APP4	User application field 4

Table 45: **S2MM BD Field Description**

Address Offset	Name	Description
0x00	Next Descriptor	Next descriptor pointer
0x04	Next Descriptor (MSB)	MSB (32 bits) next descriptor pointer
0x08	Buffer Address	Buffer descriptor address
0x0C	Buffer Address (MSB)	MSB (32bits) buffer descriptor address
0x10	RSVD	Reserved
0x14	Control	Control Information field
0x18	Status	Status field
0x1C	Sideband Status	Status of sideband signals
0x20	APP0	User application field 0
0x24	APP1	User application field 1
0x28	APP2	User application field 2
0x2C	APP3	User application field 3

表45：S2MM BD字段描述（续）

地址偏移	Name	描述
0x30	APP4	用户应用领域 4

笔记：

1. 地址空间偏移量是相对于系统内存中的16到32位字对齐的，即0x00、0x40、0x80，依此类推。

2. 用户应用字段（APP0、APP1、APP2、APP3 和 APP4）仅在包含控制/状态流时使用。当未包含控制/状态流时，Scatter Gather 引擎不会获取或更新用户应用字段。

3. 只有当 MCDMA 被配置为大于 32 位的地址空间时，MSB 字段或上位 32 位地址才会被使用。

MM2S 和 S2MM 中的下一个描述符和缓冲区地址字段是相同的，描述如下。

下一个描述符指针 (0x00)

该值提供指向链中下一个描述符的指针。

表46：下一个描述符指针（0x00）

Bits	Name	描述
31: 6	下一个指针	指示指向下一个第一个字的低位指针 描述符。 注意：描述符必须是16字对齐的，即 0x00、0x40、0x80 等。 任何其他对齐方式的结果都是不确定的。
5:0	RSVD	保留

下一个描述符 MSB 指针 (0x04)

该值提供指向描述符链中下一个描述符指针的高32位。仅当 AXI MCDMA 配置为大于 32 位的地址空间时使用。字段描述如下。

表47：下一个描述符 MSB 指针 (0x04)

Bits	Name	描述
31: 0	下一个指针	表示指向下一个第一个字的指针的最高有效32位 描述符。

Table 45: **S2MM BD Field Description** *(cont'd)*

Address Offset	Name	Description
0x30	APP4	User application field 4

Notes:

1. Address Space Offset is relative to 16 to 32-bit word alignment in system memory, that is, 0x00, 0x40, 0x80, and so forth.
2. User Application fields (APP0, APP1, APP2, APP3, and APP4) are only used when the Control / Status streams are included, When the Control/Status streams are not included, User Application fields are not fetched or updated by the Scatter Gather Engine.
3. The MSB fields or the upper 32-bit addresses are used only when MCDMA is configured for an address space greater than 32.

The Next Descriptor and Buffer Address fields in MM2S and S2MM are identical and are described as follows.

Next Descriptor Pointer (0x00)

This value provides the pointer to the next descriptor in the chain.

Table 46: **Next Descriptor Pointer (0x00)**

Bits	Name	Description
31: 6	Next Pointer	Indicates the lower order pointer pointing to the first word of the next descriptor. ***Note:*** Descriptors must be 16-word aligned that is, 0x00, 0x40, 0x80, and so forth. Any other alignment has undefined results.
5:0	RSVD	Reserved

Next Descriptor MSB Pointer (0x04)

This value provides the upper 32 bits of the pointer to the next descriptor in the descriptor chain. This is used only when AXI MCDMA is configured for an address space greater than 32. The fields are described as follows.

Table 47: **Next Descriptor MSB Pointer (0x04)**

Bits	Name	Description
31: 0	Next Pointer	Indicates the MSB 32 bits of the pointer pointing to the first word of the next descriptor.

缓冲区地址 (0x08)

该值提供指向可用于将数据从流传输到系统内存的缓冲区空间的指针。字段描述如下。

表 48：缓冲区地址 (0x08)

Bits	Name	描述
31: 0	缓冲区地址	提供用于存储传输数据的缓冲区空间的位置 流到内存映射。 注意：如果包含数据重新对齐引擎，缓冲区地址可以在 任何字节偏移。如果未包含数据重排引擎，则缓冲区 地址必须与内存映射的数据宽度对齐。

MSB缓冲区地址 MSB (0x0C)

该值提供指向可用缓冲区空间的指针的高32位，用于将数据从流传输到系统内存。仅当AXI MCDMA配置为超过32位的地址空间时使用。各字段描述如下。

表49：MSB缓冲区地址MSB (0x0C)

Bits	Name	描述
31: 0	缓冲区地址 (MSB)	提供可用于存储的缓冲区空间位置的最高有效32位 数据从流传输到内存映射。

控制 (0x14)

这个值提供了从流到内存映射的 MM2S 传输控制。各字段描述如下。

表50：控制（0x14）

Bits	Name	描述
31	德克萨斯 州兵力概 况	帧开始。指示要处理的第一个缓冲区的标志。该标志由...设置 CPU 向 AXI MCDMA 指示该描述符描述了开始 数据包。与该描述符关联的缓冲区首先被传输。 • 0 = 不是帧的开始 . • 1 = 帧开始 .
30	TX 文件结 束	帧结束。指示要处理的最后一个缓冲区的标志。该标志由...设置 CPU 向 AXI MCDMA 指示该描述符描述的是结束 数据包。与此描述符相关联的缓冲区最后被传输，并导致 在 TLAST 断言中 . • 0 = 不是帧结束 . • 1 = 帧结束 .
29:26	保留	

Buffer Address (0x08)

This value provides the pointer to the buffer space available to transfer data from stream to system memory. The fields are described as follows.

Table 48: **Buffer Address (0x08)**

Bits	Name	Description
31: 0	Buffer Address	Provides the location of the buffer space available to store data transferred from stream to memory map. ***Note:*** If the Data Realignment Engine is included, the Buffer Address can be at any byte offset. If the Data Realignment Engine is not included the Buffer Address must be memory-mapped data width aligned.

MSB Buffer Address MSB (0x0C)

This value provides the upper 32 bits of the pointer to the buffer space available to transfer data from stream to system memory. This is used only when AXI MCDMA is configured for an address space greater than 32. The fields are described as follows.

Table 49: **MSB Buffer Address MSB (0x0C)**

Bits	Name	Description
31: 0	Buffer Address (MSB)	Provides the MSB 32 bits of the location of the buffer space available to store data transferred from stream to memory map.

Control (0x14)

This value provides control for MM2S transfers from stream to memory map. The fields are described as follows.

Table 50: **Control (0x14)**

Bits	Name	Description
31	TX SoF	Start of Frame. Flag indicating the first buffer to be processed. This flag is set by the CPU to indicate to AXI MCDMA that this descriptor describes the start of the packet. The buffer associated with this descriptor is transmitted first. • 0 = Not start of frame. • 1 = Start of frame.
30	TX EoF	End of Frame. Flag indicating the last buffer to be processed. This flag is set by the CPU to indicate to AXI MCDMA that this descriptor describes the end of the packet. The buffer associated with this descriptor is transmitted last and results in TLAST assertion. • 0 = Not End of Frame. • 1 = End of Frame.
29:26	Reserved	

表50：控制（0x14）（续）

Bits	Name	描述
25:0	缓冲区长度	表示传输缓冲区的字节大小。该值表示数量 要在 MM2S 流上发送的字节数。缓冲区长度的可用宽度 由缓冲区长度寄存器的宽度参数指定 (c_sg_length_width)。最多可以描述 67,108,863 字节的传输 通过此字段。此值应为 AXI4-Stream 数据的整数倍 宽度。然而，如果设置了 TX EOF 位，它可以具有任何值。

控制边带 (0x18)

这些字段包含在 AXI4-Stream 数据上显示的 TID 和 TUSER 值。旁带状态字段在下表中进行了描述。

表 51：控制边带 (0x18)

Bits	Name	描述
31: 24	TID	此字段包含将在 AXI4-Stream 接口上呈现的 TID 值。 TID的值在整个数据包长度中保持不变。应注意 采取措施以确保该值在描述符链中保持不变 包裹。
二十三一六	RSVD	保留。
15:0	TUSER	此字段包含将在最后一个数据节拍上呈现的 TUSER 的值 也就是说，具有 TLAST 的数据包。

每个通道都有自己的队列。每当 CH1 活跃时，AXI4-Stream 上呈现的 TDEST 为 0。当 CH2 活跃时，TDEST 为 1，依此类推。

状态 (0x1C)

该值提供从内存映射到流的 MM2S 传输状态。此字段由 MCDMA 更新。

表 52：状态 (0x1C)

Bits	Name	描述
31	已完成	已完成。这向软件表明 MCDMA 引擎已 根据相关描述符完成了传输。MCDMA 当传输完成时，发动机会将此位设置为1。软件可以 操纵任何已将 Completed 位设置为 1 的描述符。 • 0 = 描述符未完成。 • 1 = 描述符已完成。 注意：如果使用此位设置为 1 来获取描述符，则该描述符被视为 陈旧的描述符。SGIntErr 被标记，AXI MCDMA 引擎停止工作。

Table 50: **Control (0x14)** *(cont'd)*

Bits	Name	Description
25:0	Buffer Length	Indicates the size in bytes of the transfer buffer. This value indicates the amount of bytes to transmit out on the MM2S stream. The usable width of buffer length is specified by the parameter Width of Buffer Length Register (c_sg_length_width). A maximum of 67,108,863 bytes of transfer can be described by this field. This value should be an integer multiple of the AXI4-Stream data width. However, it can have any value if the TX EOF bit is set.

Control Sideband (0x18)

The fields contain the TID and TUSER values that are presented on the AXI4-Stream data. The Sideband Status fields are described in the following table.

Table 51: **Control Sideband (0x18)**

Bits	Name	Description
31: 24	TID	This field contains the value of TID to be presented on the AXI4-Stream interface. The value of TID remains the same throughout the packet length. Care should be taken to ensure that this value remains constant in the descriptor chain for a packet.
23:16	RSVD	Reserved.
15:0	TUSER	This field contains the value of TUSER to be presented on the last data beat of the packet that is, the beat that has TLAST.

Each channel has its own queue. Whenever CH1 is active, the TDEST presented on AXI4-Stream is 0. TDEST is 1 when CH2 is active and so on.

Status (0x1C)

This value provides the status for MM2S transfers from memory map to stream. This field is updated by the MCDMA.

Table 52: **Status (0x1C)**

Bits	Name	Description
31	Completed	Completed. This indicates to the software that the MCDMA engine has completed the transfer as described by the associated descriptor. The MCDMA Engine sets this bit to 1 when the transfer is completed. The software can manipulate any descriptor with the Completed bit set to 1. • 0 = Descriptor not completed. • 1 = Descriptor completed. ***Note***: If a descriptor is fetched with this bit set to 1, the descriptor is considered a stale descriptor. A SGIntErr is flagged and the AXI MCDMA engine halts.

表52：状态 (0x1C)（续）

Bits	Name	描述
30	DMA 数据错误	DMA 解码错误：由主 AXI 数据移动器检测到解码错误。此错误 如果描述符缓冲区地址指向无效地址，则会发生此错误。这个错误 该条件导致 AXI MCDMA 平稳停止。MCDMACR.RS 位被设置为 0，当发动机完全关闭时，MCDMASR.Halted 位是 设置为 1 . • 0 = 无 MCDMA 解码错误 . • 1 = 检测到MCDMA解码错误。MCDMA引擎停止。
29	DMA 从属错误	DMA 从属错误：主 AXI 数据搬运器检测到从属错误。此错误 如果从内存映射接口读取的从设备发出从设备错误，则会发生这种情况。这 错误状态导致 AXI MCDMA 平稳停止。MCDMACR.RS 位是 设置为0，当发动机完全关闭时，MCDMASR.Halted 位被设为1 . • 0 = 无MCDMA从属错误 . • 1 = 检测到 MCDMA 从属错误。MCDMA 引擎停止。
28	DMA 内部错误	MCDMA 内部错误：AXI 数据搬运器检测到内部错误。此错误可能 如果将长度为 0 的字节传输输入到 AXI DataMover，可能会发生这种情况。这只是 如果在获取的描述符中指定的缓冲区长度设置为0，会发生这种情况。这 如果存在下溢或上溢情况，也可能导致错误 . 此错误情况会导致 AXI MCDMA 优雅地停止。MCDMACR.RS 位被设置为0，当引擎完全关闭时， MCDMASR。暂停位被设置为1 . • 0 = 无 MCDMA 内部错误 . • 1 = 检测到MCDMA内部错误。MCDMA引擎停止。
27:26	保留	
25:0	已传输字节	表示此描述符实际传输数据的字节大小。这个 value 表示要在 MM2S 流上发出的字节数。这个值 应该与控制缓冲区长度字段匹配。传输的可用宽度 字节由缓冲区的宽度参数指定。 长度寄存器 (c_sg_length_width)。最大传输67,108,863字节 可以用这个领域来描述。

APP0–APP4 字段 (0x20–0x30)

该值为用户应用字段提供空间，以便 MM2S 通过控制流发送。

表 53：APP0–APP4 字段 (0x20–0x30)

Bits	Name	描述
31: 0	APP0–APP4	用户应用字段 0 到 4。指定用户特定的应用数据。当 状态控制流已启用，启动的应用程序 (APP) 字段 帧（SOF）描述符被传输到 AXI 控制流。对于其他 带有 SOF = 0 的 MM2S 描述符，APP 字段已获取但被忽略。

控制 (0x14)

该值提供从流到内存映射的 S2MM 传输控制。字段描述如下。

Table 52: **Status (0x1C)** *(cont'd)*

Bits	Name	Description
30	DMA DecErr	DMA Decode Error: Decode Error detected by primary AXI DataMover. This error occurs if the Descriptor Buffer Address points to an invalid address. This error condition causes the AXI MCDMA to halt gracefully. The MCDMACR.RS bit is set to 0, and when the engine has completely shut down, the MCDMASR.Halted bit is set to 1. • 0 = No MCDMA Decode Errors. • 1 = MCDMA Decode Error detected. MCDMA Engine halts.
29	DMA SlvErr	DMA Slave Error: Slave Error detected by primary AXI DataMover. This error occurs if the slave read from the Memory Map interface issues a Slave Error. This error condition causes the AXI MCDMA to halt gracefully. The MCDMACR.RS bit is set to 0, and when the engine has completely shut down, the MCDMASR.Halted bit is set to 1. • 0 = No MCDMA Slave Errors. • 1 = MCDMA Slave Error detected. MCDMA Engine halts.
28	DMA IntErr	MCDMA Internal Error: Internal Error detected by AXI DataMover. This error can occur if a 0 length bytes to transfer is fed to the AXI DataMover. This only happens if the Buffer Length specified in the fetched descriptor is set to 0. This error can also be caused if there is an under-run or over-run condition. This error condition causes the AXI MCDMA to halt gracefully. The MCDMACR.RS bit is set to 0, and when the engine has completely shut down, the MCDMASR.Halted bit is set to 1. • 0 = No MCDMA Internal Errors. • 1 = MCDMA Internal Error detected. MCDMA Engine halts.
27:26	Reserved	
25:0	Transferred Bytes	Indicates the size in bytes of the actual data transferred for this descriptor. This value indicates the amount of bytes to transmit out on MM2S stream. This value should match the Control Buffer Length field. The usable width of Transferred Bytes is specified by the parameter Width of Buffer. Length register (c_sg_length_width). A maximum of 67,108,863 bytes of transfer can be described by this field.

APP0–APP4 Fields (0x20–0x30)

This value provides the User Application field space for the MM2S to be sent over the Control Stream.

Table 53: **APP0–APP4 Fields (0x20–0x30)**

Bits	Name	Description
31: 0	APP0–APP4	User application fields 0 to 4. Specifies user-specific application data. When Status Control Stream is enabled, the Application (APP) fields of the Start of Frame (SOF) Descriptor are transmitted to the AXI Control Stream. For other MM2S descriptors with SOF = 0, the APP fields are fetched but ignored.

Control (0x14)

This value provides control for S2MM transfers from stream to memory map. The fields are described as follows.

表 54：控制 (0x14)

Bits	Name	描述
31: 26	保留	
25:0	缓冲区长度	此值表示可用于接收数据的字节空间量 一个S2MM流。缓冲区长度的可用宽度由参数指定 缓冲区长度寄存器的宽度 (c_sg_length_width)。最大值为 67,108,863 传输的字节数可以通过此字段描述。该值应为整数 AXI4-Stream 数据宽度的倍数。 注意：S2MM 描述符链中的总缓冲区空间（即总和） 链中每个描述符的缓冲区长度值)必须至少为， 能够容纳最大接收数据包大小。如果...，将会产生未定义的结果 接收到大于定义缓冲区的包。 注意：将缓冲区长度寄存器宽度设置小于26会降低FPGA 资源利用 .

状态 (0x18)

此值提供从流到内存映射的 S2MM 传输状态。此字段由 MCDMA 更新。各字段描述如下。

表 55：状态 (0x18)

Bits	Name	描述
31	已完成	已完成。这向软件表明 MCDMA 引擎已 根据相关描述符完成了传输。MCDMA 当传输完成时，发动机会将此位设置为1。软件可以 操纵任何已将 Completed 位设置为 1 的描述符。 • 0 = 描述符未完成。 • 1 = 描述符已完成。 注意：如果使用此位设置为 1 来获取描述符，则该描述符被视为 陈旧的描述符。SGIntErr 被标记，AXI MCDMA 引擎停止工作。
30	DMA 数据错误	DMA 解码错误：由主 AXI 数据移动器检测到解码错误。此错误 如果描述符缓冲区地址指向无效地址，将会发生此错误。此错误 该条件导致 AXI MCDMA 平稳停止。MCDMACR.RS 位被设置为 0，当发动机完全关闭时，MCDMASR.Halted 位是 设置为1 . • 0 = 无 MCDMA 解码错误 . • 1 = 检测到 MCDMA 解码错误。MCDMA 引擎停止
29	DMA 从属错误	DMA 从属错误：主 AXI 数据搬运器检测到从属错误。此错误 如果从内存映射接口读取的从设备发出从设备错误，则会发生这种情况。这 错误状态导致 AXI MCDMA 平稳停止。MCDMACR.RS 位是 设置为0，当发动机完全关闭时，MCDMASR.Halted 位被设为1 . • 0 = 无 MCDMA 从属错误 . • 1 = 检测到MCDMA从属错误。MCDMA引擎停止。

Table 54: **Control (0x14)**

Bits	Name	Description
31: 26	Reserved	
25:0	Buffer Length	This value indicates the amount of space in bytes available for receiving data in an S2MM stream. The usable width of buffer length is specified by the parameter Width of Buffer Length Register (c_sg_length_width). A maximum of 67,108,863 bytes of transfer can be described by this field. This value should be an integer multiple of AXI4-Stream data width. ***Note***: The total buffer space in the S2MM descriptor chain (that is, the sum of buffer length values for each descriptor in a chain) must be, at a minimum, capable of holding the maximum receive packet size. Undefined results occur if a packet larger than the defined buffer space is received. ***Note***: Setting the Buffer Length Register Width smaller than 26 reduces FPGA resource utilization.

Status (0x18)

This value provides the status for S2MM transfers from stream to memory map. This field is updated by the MCDMA. The fields are described as follows.

Table 55: **Status (0x18)**

Bits	Name	Description
31	Completed	Completed. This indicates to the software that the MCDMA Engine has completed the transfer as described by the associated descriptor. The MCDMA Engine sets this bit to 1 when the transfer is completed. The software can manipulate any descriptor with the Completed bit set to 1. • 0 = Descriptor not completed. • 1 = Descriptor completed. ***Note***: If a descriptor is fetched with this bit set to 1, the descriptor is considered a stale descriptor. A SGIntErr is flagged and the AXI MCDMA engine halts.
30	DMA DecErr	DMA Decode Error: Decode Error detected by primary AXI DataMover. This error occurs if the Descriptor Buffer Address points to an invalid address. This error condition causes the AXI MCDMA to halt gracefully. The MCDMACR.RS bit is set to 0, and when the engine has completely shut down, the MCDMASR.Halted bit is set to 1. • 0 = No MCDMA Decode Errors. • 1 = MCDMA Decode Error detected. MCDMA Engine halts
29	DMA SlvErr	DMA Slave Error: Slave Error detected by primary AXI DataMover. This error occurs if the slave read from the Memory Map interface issues a Slave Error. This error condition causes the AXI MCDMA to halt gracefully. The MCDMACR.RS bit is set to 0, and when the engine has completely shut down, the MCDMASR.Halted bit is set to 1. • 0 = No MCDMA Slave Errors. • 1 = MCDMA Slave Error detected. MCDMA Engine halts.

表55：状态 (0x18)（续）

Bits	Name	描述
28	DMA 内部错误	MCDMA 内部错误：AXI 数据搬运器检测到内部错误。此错误可能 如果将长度为 0 的字节传输输入到 AXI DataMover，可能会发生这种情况。这只是 如果在获取的描述符中指定的缓冲区长度设置为0，会发生这种情况。这 如果发生下溢或上溢情况，也可能导致错误 . 此错误情况会导致 AXI MCDMA 优雅地停止。MCDMACR.RS 位被设置为0，当引擎完全关闭时， MCDMASR.暂停位被设置为1 . • 0 = 无 MCDMA 内部错误 . • 1 = 检测到MCDMA内部错误。MCDMA引擎停止。
27	RXSOF	帧开始：标志指示缓冲区包含数据包的第一部分。该位由...设置 AXI MCDMA 用于指示与该描述符关联的缓冲区包含 数据包的开始。 • 0 = 不是帧的开始 . • 1 = 帧开始 .
26	RXEOF	帧结束：标志指示缓冲区包含数据包的最后部分。此位由...设置 AXI MCDMA 用于指示与该描述符关联的缓冲区包含 数据包的末尾。 • 0 = 不是帧结束 . • 1 = 帧结束 . 注意：通过状态流输入发送的用户应用程序数据将被存储在 当控制/状态流为时，RXEOF 描述符的 APP0 到 APP4 已启用 .
25:0	已传输字节	该值表示接收并存储在缓冲区中的数据量 由此描述符描述。这可能与缓冲区长度匹配，也可能不匹配。 例如，如果这个描述符指示缓冲区长度为1024字节，但实际上只有50 字节被接收并存储在缓冲区中，然后是已传输字节字段 指示 0x32。整个接收数据包的长度可以通过将其相加来确定 将每个描述符的字节值从 RXSOF 描述符传输到 接收帧结束（RXEOF）描述符。 注意：可用传输字节的宽度由参数 Width 指定 缓冲区长度寄存器的 (c_sg_length_width)。最大为 67,108,863 字节的 转移可以通过这个字段来描述。 注意：将缓冲区长度寄存器宽度设置小于26会降低FPGA 资源利用 .

边带状态 (0x1C)

这些字段包含传入 AXI4-Stream 数据的 TID、TDEST 和 TUSER 值。该字段由 MCDMA 更新。旁带状态字段在下表中说明。

表 56：边带状态 (0x1C)

Bits	Name	描述
31: 24	TID	此字段包含AXI4-Stream输入端存在的TID值。它是 预计该值应在整个数据包长度中保持不变。
二十三二十	RSVD	保留。
一九一六	TDEST	此字段包含 TDEST 的值。

Table 55: **Status (0x18)** *(cont'd)*

Bits	Name	Description
28	DMA IntErr	MCDMA Internal Error: Internal Error detected by AXI DataMover. This error can occur if a 0 length bytes to transfer is fed to the AXI DataMover. This only happens if the Buffer Length specified in the fetched descriptor is set to 0. This error can also be caused if an under-run or over-run condition. This error condition causes the AXI MCDMA to halt gracefully. The MCDMACR.RS bit is set to 0, and when the engine has completely shut down, the MCDMASR.Halted bit is set to 1. • 0 = No MCDMA Internal Errors. • 1 = MCDMA Internal Error detected. MCDMA Engine halts.
27	RXSOF	Start of Frame: Flag indicating buffer holds first part of packet. This bit is set by AXI MCDMA to indicate that the buffer associated with this descriptor contains the start of the packet. • 0 = Not start of frame. • 1 = Start of frame.
26	RXEOF	End of Frame: Flag indicating buffer holds the last part of packet. This bit is set by AXI MCDMA to indicate that the buffer associated with this descriptor contains the end of the packet. • 0 = Not End of Frame. • 1 = End of Frame. ***Note***: User Application data sent through the status stream input is stored in APP0 to APP4 of the RXEOF descriptor when the Control/Status Stream is enabled.
25:0	Transferred Bytes	This value indicates the amount of data received and stored in the buffer described by this descriptor. This might or might not match the buffer length. For example, if this descriptor indicates a buffer length of 1,024 bytes but only 50 bytes were received and stored in the buffer, then the Transferred Bytes field indicates 0x32. The entire receive packet length can be determined by adding the Transferred Byte values from each descriptor from the RXSOF descriptor to the Receive End of Frame (RXEOF) descriptor. ***Note***: The usable width of Transferred Bytes is specified by the parameter Width of Buffer Length Register (c_sg_length_width). A maximum of 67,108,863 bytes of transfer can be described by this field. ***Note***: Setting the Buffer Length Register Width smaller than 26 reduces FPGA resource utilization.

Sideband Status (0x1C)

The fields contain the TID, TDEST, and TUSER values of the incoming AXI4-Stream data. This field is updated by the MCDMA. The Sideband Status fields are described in the following table.

Table 56: **Sideband Status (0x1C)**

Bits	Name	Description
31: 24	TID	This field contains the value of TID present on the AXI4-Stream input. It is expected that this value should remain constant throughout the packet length.
23:20	RSVD	Reserved.
19:16	TDEST	This field contains the value of TDEST.

表56：边带状态 (0x1C)（续）

Bits	Name	描述
15:0	TUSER	此字段包含数据包最后一个数据节上存在的 TUSER 的值 那是 ，具有 TLAST 的节拍 .

APP0–APP3 字段 (0x20–0x2C)

此值为状态流上的 S2MM 接收状态提供用户应用字段空间。

表57：APP0–APP3 字段 (0x20–0x2C)

Bits	Name	描述
31: 0	APP0–APP3	当启用状态/控制流时，接收到的AXI上的状态数据 状态流存储在帧结束 (EOF) 描述符的应用字段中。 对于其他具有 EOF = 0 的 S2MM 描述符，APP 字段由…设置为零 散点聚合引擎 注意：如果状态/，Scatter Gather 引擎不会更新这些字段 控制字段已禁用 .

APP4 字段 (0x30)

该值为用户应用程序 4 字段提供在状态流上接收 S2MM 状态的空间。

表58：APP4字段（0x30）

Bits	Name	描述
31: 0	APP4	用户应用字段 4 和接收字节长度。如果在状态中使用 RxLength 流未启用，该字段的功能与 APP0 到 APP3 相同 在 AXI 状态流上接收到的状态数据存储到 APP4 字段中 帧结束（EOF）描述符。当使用接收长度（Use RxLength）时，此字段具有双重用途 状态流中已启用。在缓冲区中指定的最低有效位 长度寄存器宽度（最多16）指定总数 接收在 S2MM 主数据流上收到的数据包字节。 其次，其余最重要的位是用户应用数据。

描述符管理

在开始 MCDMA 操作之前，软件应用程序必须设置描述符链（每个通道一个，用于 MM2S 和 S2MM）。当 AXI MCDMA 开始处理描述符时，它会获取、处理并更新描述符。一个单独的散布聚集引擎以轮询方式获取所有通道的描述符，同时在 MM2S 和 S2MM 描述符之间交替。

Table 56: **Sideband Status (0x1C)** *(cont'd)*

Bits	Name	Description
15:0	TUSER	This field contains the value of TUSER present on the last data beat of the packet that is, the beat that has TLAST.

APP0–APP3 Fields (0x20–0x2C)

This value provides the User Application field space for the S2MM received status on the Status Stream.

Table 57: **APP0 –APP3 Fields (0x20–0x2C)**

Bits	Name	Description
31: 0	APP0–APP3	When Status/Control Stream is enabled, the status data received on the AXI Status Stream is stored into the APP fields of the End of Frame (EOF) Descriptor. For other S2MM descriptors with EOF = 0, the APP fields are set to zero by the Scatter Gather Engine. ***Note:*** These fields are not updated by the Scatter Gather Engine if the Status/Control Fields are disabled.

APP4 Field (0x30)

This value provides the User Application 4 field space for S2MM received status on the Status Stream.

Table 58: **APP4 Field (0x30)**

Bits	Name	Description
31: 0	APP4	User Application field 4 and Receive Byte Length. If Use RxLength In Status Stream is not enabled, this field functions identically to APP0 to APP3 in that the status data received on the AXI Status Stream is stored into the APP4 field of the End of Frame (EOF) Descriptor. This field has a dual purpose when Use RxLength in Status Stream is enabled. The first least significant bits specified in the Buffer Length Register Width (up to a maximum of 16) specify the total number of receive bytes for a packet that were received on the S2MM primary data stream. Second, the remaining most significant bits are User Application data.

Descriptor Management

Prior to starting MCDMA operations, the software application must set up a descriptor chain (one for each channel for MM2S and S2MM). When the AXI MCDMA begins processing the descriptors, it fetches, processes, and updates the descriptors. A single Scatter Gather engine fetches the descriptors of all channels in a round robin manner while alternating between MM2S and S2MM descriptors.

通过分析描述符，软件应用程序可以读取相关 MCDMA 传输的状态，获取接收 (S2MM) 通道的用户信息，并确定传输是否完成。通过这些信息，软件应用程序可以管理描述符和数据缓冲区。软件应用程序处理与已完成描述符相关的每个缓冲区，并重新分配描述符以用于 AXI MCDMA。为了防止软件和硬件相互冲突，创建了一个尾指针模式。尾指针由软件初始化，指向描述符链的末端。这成为硬件的暂停点。当硬件开始运行时，它会获取并处理链中的每个描述符，直到达到尾指针。

AXI MCDMA 然后会暂停描述符的处理。软件可以处理并重新分配任何完成位（Complete bit）被设置为 1 的描述符。向 TAILDESC 寄存器写入的操作会导致 AXI MCDMA 硬件在尾指针处暂停时重新开始处理描述符。如果 AXI MCDMA 硬件没有在 TAILDESC 指针处暂停，向 TAILDESC 寄存器写入对硬件没有影响。在这种情况下，AXI MCDMA 会继续处理描述符，直到达到新的尾描述符指针位置。描述符管理必须由软件完成。AXI MCDMA 不管理描述符。

MM2S 描述符设置和 AXI4-Stream 控制流

描述符 SOF/EOF 设置与 AXI 控制流之间的关系如下图所示。具有 SOF = 1 的描述符是数据包的开始。如果状态/控制流启用，该描述符的用户应用字段也会显示在 AXI 控制流上。紧跟着具有 SOF = 1 的描述符之后，直到包含 EOF =1 的描述符，AXI MCDMA 引擎将忽略这些用户应用字段。如果状态/控制流被禁用，SG 获取引擎不会获取这些用户应用字段。

AXI 控制流由 Scatter Gather 描述符提供给目标设备，用于用户应用数据。控制数据与 MM2S 主数据流相关联，可以在主数据包之前、期间或之后从 AXI MCDMA 发出。允许目标设备进行限流，也可能发生 AXI MCDMA 的限流。AXI MCDMA 向目标设备插入一个指示数据类型的标志。这作为第一个字发送。对于以太网，控制标签在第一个字的四个最高有效位（MSBs）中为 0xA。MCDMA 在数据阶段开始之前，为通道输出控制流。

By analyzing the descriptors, the software application can read the status on the associated MCDMA transfer, fetch user information on receive (S2MM) channels, and determine completion of the transfer. With this information, the software application can manage the descriptors and data buffers. Software applications process each buffer associated with completed descriptors and reallocate the descriptor for AXI MCDMA use. To prevent software and hardware from stepping on each other, a tail pointer Mode is created. The tail pointer is initialized by software to point to the end of the descriptor chain. This becomes the pause point for hardware. When hardware begins running, it fetches and processes each descriptor in the chain until it reaches the tail pointer.

The AXI MCDMA then pauses descriptor processing. The software is allowed to process and re-allocate any descriptor whose Complete bit is set to 1. The act of writing to the TAILDESC register causes the AXI MCDMA hardware to begin processing descriptors again if it is paused at the tail pointer. If the AXI MCDMA hardware is not paused at the TAILDESC pointer, writing to the TAILDESC register has no effect on the hardware. In this situation, the AXI MCDMA continues to process descriptors until reaching the new tail descriptor pointer location. Descriptor Management must be done by the software. AXI MCDMA does not manage the descriptors.

MM2S Descriptor Setting and AXI4-Stream Control Stream

The relationship between descriptor SOF/EOF settings and the AXI Control Stream is illustrated in the following figure. The descriptor with SOF = 1 is the beginning of the packet. The User Application fields for this descriptor are also presented on the AXI Control Stream if the Status/Control Stream is enabled. User Application fields following a descriptor with SOF = 1, up to and including the descriptor with EOF =1, are ignored by the AXI MCDMA engine. If Status/Control Stream is disabled, the User Application fields are not fetched by the SG Fetch Engine.

The AXI control stream is provided from the Scatter Gather Descriptor to a target device for User Application data. The control data is associated with the MM2S primary data stream and can be sent out of AXI MCDMA prior to, during, or after the primary data packet. Throttling by the target device is allowed, and throttling by AXI MCDMA can occur. AXI MCDMA inserts a flag indicating the data type to the target device. This is sent as the first word. For Ethernet, the control tag is 0xA in the four Most Significant Bits (MSBs) of the first word. The MCDMA outputs the Control Stream for a channel before the start of the data phase.

图 2：描述符 SOF/EOF 设置与 AXI 控制流之间的关系

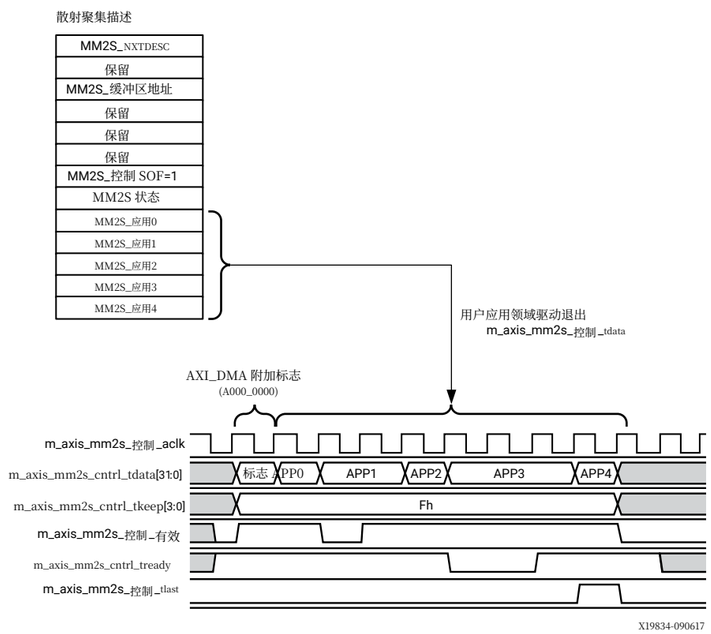

S2MM 描述符设置与 AXI 状态流

描述符 RXSOF/RXEOF 设置与 AXI 状态流之间的关系如下图所示。带有 RXSOF = 1 的描述符描述包含接收数据包第一部分的缓冲区。带有 RXEOF = 1 的描述符描述包含接收数据包最后部分的缓冲区。为了正确操作，软件必须指定足够的缓冲区空间（描述符链中每个描述符的缓冲区长度总和）以大于或等于接收的最大数据包大小。如果包含状态/控制流，接收到的状态将存储在设置了 RXEOF 的描述符的用户应用字段（APP0 到 APP4）中。对于特定缓冲区，接收和存储数据的实际字节数将更新到相关描述符的已传输字节字段中。软件可以通过从 RXSOF 到 RXEOF 遍历描述符并将已传输字节字段相加，来确定接收了多少字节，以获得总计。

Figure 2: **Relationship Between Descriptor SOF/EOF Settings and the AXI Control Stream**

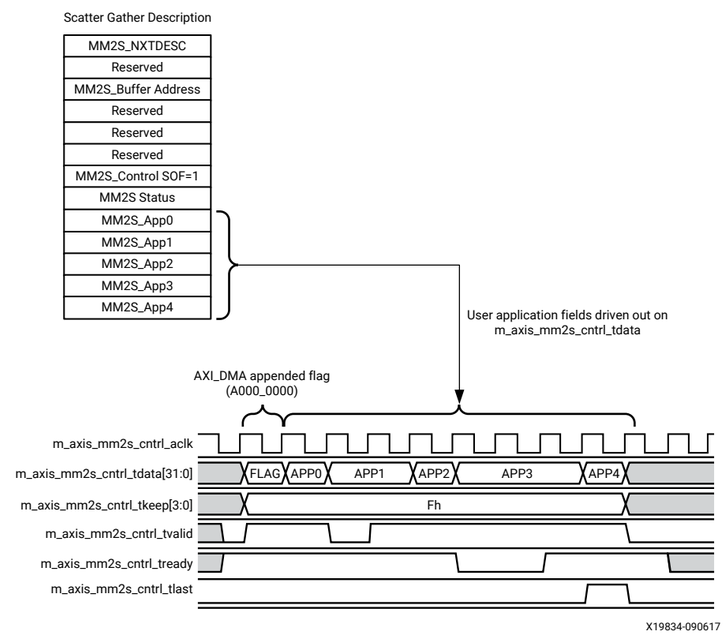

S2MM Descriptor Setting and AXI Status Stream

The relationship between the descriptor RXSOF/RXEOF settings and the AXI Status Stream is illustrated in the following figure. The descriptor with RXSOF = 1 describes the buffer containing the first part of the receive packet. The Descriptor with RXEOF = 1 describes the buffer containing the last part of the receive packet. For proper operation, the software must specify enough buffer space (the sum of the buffer lengths in each descriptor of the descriptor chain) to be greater than or equal to the maximum sized packet that is received. If the Status/Control Stream is included, the status received is stored in the User Application fields (APP0 to APP4) of the descriptor with RXEOF set. The actual byte count of received and stored data for a particular buffer is updated to the Transferred Bytes field in the associated descriptor. The software can determine how many bytes were received by walking the descriptors from RXSOF to RXEOF and adding the Bytes Transferred fields to get a total byte count.

对于在状态流中提供总长度的应用，此值存储在描述符中用户定义的应用位置中，使用 RXEOF = 1。AXI 状态流用于将目标设备状态传输到 Scatter Gather 描述符中的用户应用数据字段。状态数据与 S2MM 主数据流相关联。如下面的图所示，状态包会更新到描述该包的检测到的最后一个描述符（RXEOF = 1）的应用字段。通常，状态流应在 S2MM 数据流开始时到达。如果禁用“在状态流中使用接收长度”，状态流可以在 S2MM 帧的任何时间到达。帧结束（EOF）缓冲描述符（BD）更新仅在接收到整个状态流后才会发生。

图 3：描述符 RXSOF/RXEOF 设置与 AXI 状态流之间的关系

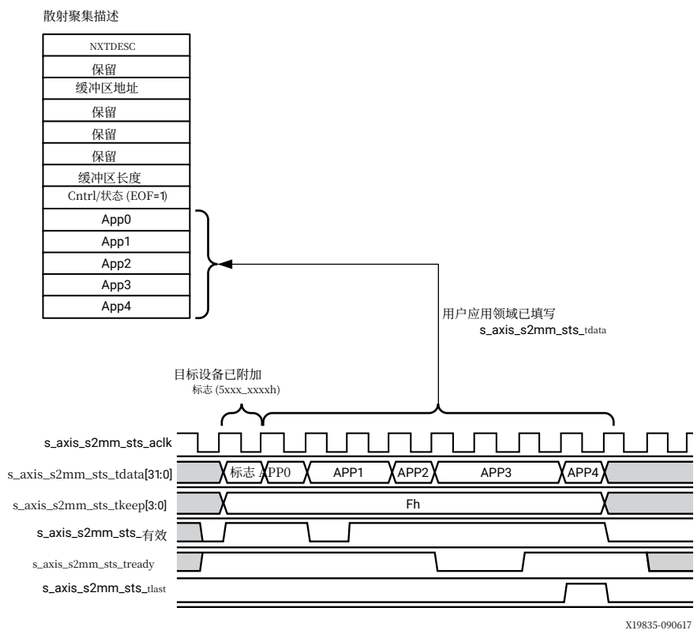

For applications where you provide the total length in the status stream, this value is stored in the user-defined application location in the descriptor with RXEOF = 1. The AXI status stream is provided for transfer of the target device status to User Application data fields in the Scatter Gather descriptor. The status data is associated with the S2MM primary data stream. As shown in the following figure, the status packet updates to the app fields of the detected last descriptor (RXEOF = 1) describing the packet. Normally, the status stream should come at the start of the S2MM data stream. If the Use RxLength In Status Stream is disabled, the status stream can come at any time during the course of the S2MM frame. The End of Frame (EOF) Buffer Descriptor (BD) update will happen only when the entire status stream is received.

Figure 3: **Relationship Between Descriptor RXSOF/RXEOF Settings and the AXI Status Stream**

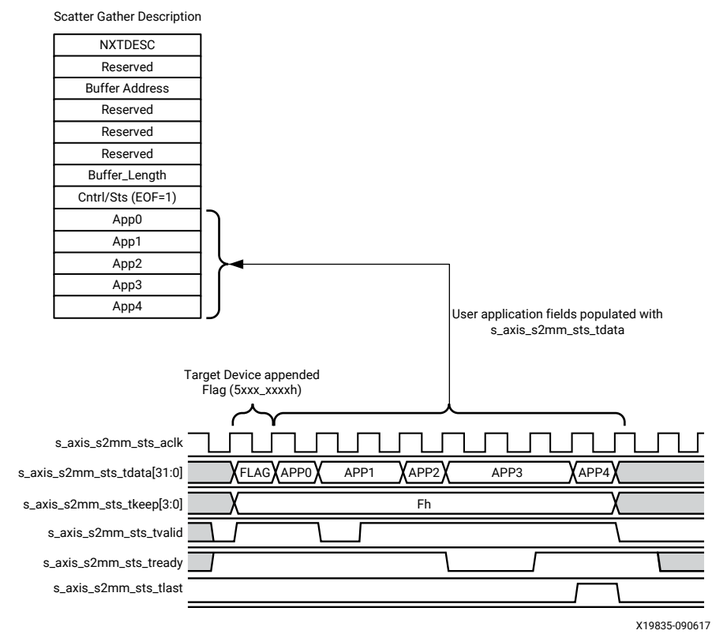

以核心设计

典型系统包含 AXI MCDMA

AXI MCDMA 在多实例 AXI MCDMA 不可行的系统中非常有用。单个 AXI MCDMA 实例能够处理描述符并为多达 16 个通道路由数据包。系统微处理器可以通过 AXI4-Lite 接口访问 AXI MCDMA。集成的散布-收集引擎从系统内存中获取缓冲区描述符，然后协调 AXI IP 与 DDRx 之间的主要数据传输。AXI MCDMA 核心的多中断输出被路由到系统中断控制器。

典型的使用案例如下图所示。

图4：典型使用案例

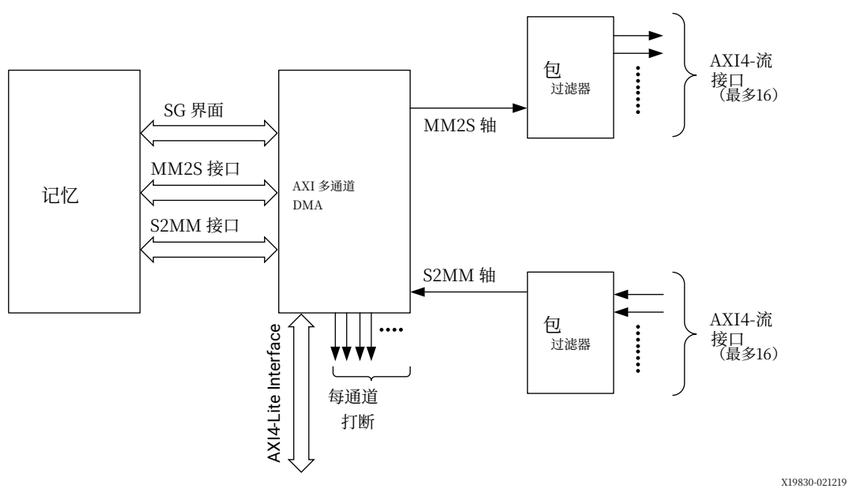

数据包过滤模块位于 AXI MCDMA 之外，并且是用户实现的逻辑，用于处理流数据。在 S2MM 端，该模块负责在 S2MM AXI4-Stream 数据上放置所需的 TDEST 值。由您决定并添加 TDEST 值。同样在 MM2S 端，该模块负责根据 MM2S AXI4-Stream 接口上存在的 TDEST 值路由 AXI4-Stream 数据。

Designing with the Core

Typical System Comprising AXI MCDMA

The AXI MCDMA is useful in systems where multiple instances of AXI MCDMA are not a viable option. A single instance of AXI MCDMA is capable of processing descriptors and routing packet for up to 16 channels. The system microprocessor has access to the AXI MCDMA through the AXI4-Lite interface. An integrated Scatter-Gather engine fetches buffer descriptors from system memory which then coordinates primary data transfers between the AXI IP and DDRx. The multi-interrupt output of the AXI MCDMA core is routed to the System Interrupt Controller.

A typical use case is shown in the following figure.

Figure 4: **Typical Use Case**

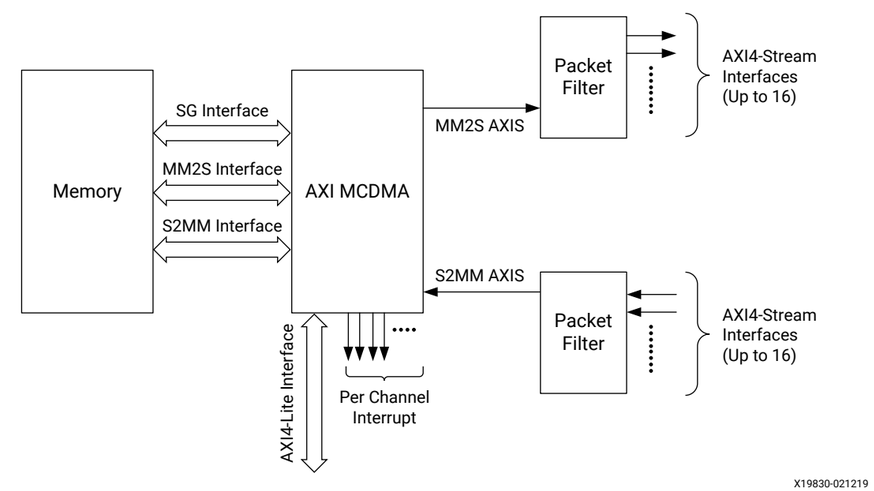

The Packet Filter module, which lies outside the AXI MCDMA and is a user-implemented logic, handles the streaming data. On the S2MM side, this module is responsible for putting a required TDEST value on the S2MM AXI4-Stream data. It is up to you determine and add the TDEST value. Similarly on the MM2S side, this module is responsible for routing the AXI4-Stream data based on the TDEST value present on the MM2S AXI4-Stream interface.

打卡

有五种可能的时钟输入可用：

- m_axi_mm2s_aclk 用于 MM2S 接口，m_axi_s2mm_aclk 用于 S2MM 接口
- s_axi_lite_aclk 用于 AXI4-Lite 控制接口
- m_axi_sg_clk 用于散布收集接口
- s_axi_aclk；SG、MM2S 和 S2MM 接口的公共时钟

AXI MCDMA 提供两种时钟工作模式：异步和同步。将 IP 配置为异步时钟可启用异步模式，并创建四个时钟域。这允许高性能用户以比 MCDMA 控制（例如，AXI4-Lite 接口、SG 引擎和 MCDMA 控制器）更高的时钟速率运行主要数据路径，有助于 FPGA 布局和时序。在此模式下，以下时钟输入引脚可用：

- m_axi_mm2s_aclk 用于 MM2S 接口，m_axi_s2mm_aclk 用于 S2MM 接口
- s_axi_lite_aclk 用于 AXI4-Lite 控制接口
- m_axi_sg_clk 用于Scatter Gather接口

在异步模式下，时钟可以异步运行，然而 s_axi_lite_aclk 必须小于或等于 m_axi_sg_aclk；m_axi_sg_aclk 必须小于或等于 m_axi_mm2s_aclk 和 m_axi_s2mm_aclk 中的较低者。

以下 g 表显示了输入/输出端口与时钟的关系 s.

表59：输入/输出端口与时钟的关系

时钟源	输入/输出端口
s axi lite aclk - - -	所有 s_axi_lite_* 信号 mm2s_introut，mm2s_ch*_introut s2mm_介绍 ，s2mm_ch*_介绍 axi_复位n
m_axi_sg_aclk	所有 m_axi_sg_* 信号
m axi mm2s aclk - - -	所有 m_axi_mm2s_* 信号 所有 m_axis_mm2s_* 信号 mm2s_prmry_reset_out_n mm2s_cntrl_reset_out_n
m axi s2mm aclk - - -	所有 m_axi_s2mm_* 信号 所有 s_轴{s2mm_* 信号 s2mm_主_复位_输出_n s2mm_状态{s9}复位_输出_n

在同步模式下，IP 使用单个时钟来运行 SG、MM2S 和 S2MM 接口。在这种情况下，IP 公开两个时钟端口，它们是 s_axi_lite_aclk 和 s_axi_aclk。s_axi_lite_aclk 必须小于或等于 s_axi_aclk。

Clocking

There are five possible clock inputs available:

- m_axi_mm2s_aclk for the MM2S interface and m_axi_s2mm_aclk for the S2MM Interface
- s_axi_lite_aclk for the AXI4-Lite control interface
- m_axi_sg_clk for Scatter Gather Interface
- s_axi_aclk; common clock for the SG, MM2S, and S2MM interfaces

AXI MCDMA provides two clocking modes of operation: asynchronous and synchronous. Configuring the IP for asynchronous clocks enables asynchronous mode and creates four clock domains. This allows high-performance users to run the primary data paths at a higher clock rate than the MCDMA control (for example, AXI4-Lite interface, SG Engine, and MCDMA Controller) helping in FPGA placement and timing. In this mode, the following clocks input pins are exposed:

- m_axi_mm2s_aclk for the MM2S interface and m_axi_s2mm_aclk for the S2MM Interface
- s_axi_lite_aclk for the AXI4-Lite control interface
- m_axi_sg_clk for the Scatter Gather interface

In asynchronous mode, clocks can be run asynchronously, however s_axi_lite_aclk must be less than or equal to m_axi_sg_aclk; m_axi_sg_aclk must be less than or equal to the lower of m_axi_mm2s_aclk and m_axi_s2mm_aclk.

The following table shows the relationship of Input/Output ports with respect to the clocks.

Table 59: **Relationship of Input/Output Ports to Clocks**

Clock Source	I/O Port
s_axi_lite_aclk	All s_axi_lite_* Signals mm2s_introut, mm2s_ch*_introut s2mm_introut, s2mm_ch*_introut axi_resetn
m_axi_sg_aclk	All m_axi_sg_* Signals
m_axi_mm2s_aclk	All m_axi_mm2s_* Signals All m_axis_mm2s_* Signals mm2s_prmry_reset_out_n mm2s_cntrl_reset_out_n
m_axi_s2mm_aclk	All m_axi_s2mm_* Signals All s_axis_s2mm_* Signals s2mm_prmry_reset_out_n s2mm_sts_reset_out_n

In synchronous mode, the IP uses a single clock to run the SG, MM2S, and S2MM interfaces. The IP exposes two clock ports in this case and they are s_axi_lite_aclk and s_axi_aclk. The s_axi_lite_aclk must be less than or equal to s_axi_aclk.

重置

axi_resetn 信号需要至少在最慢的时钟周期中保持 16 个周期，并且需要与 s_axi_lite_aclk 同步。AXI MCDMA 也可以通过写入控制寄存器的重置位来复位。复位 MM2S 也会复位 S2MM，反之亦然。

编程顺序

AXI MCDMA 操作需要一个驻留在内存中的数据结构，用于保存要执行的 MCDMA 操作列表。该指令列表被组织成所谓的描述符链。每个描述符都有一个指向下一个要处理描述符的指针。链中的最后一个描述符指向链中的第一个描述符。散射聚集操作允许一个数据包由多个描述符描述。此功能的典型用途是允许从内存中的一个位置存储或获取报头数据，而从另一个位置存储或获取有效负载数据。利用该功能的软件应用可以提高吞吐量。

为了在缓冲区描述符链中划定数据包，使用了帧起始位（TXSOF）和帧结束位（TXEOF）。当 MCDMA 获取到设置了 TXSOF 位的描述符时，会触发数据包的开始。数据包在继续获取后续描述符的过程中进行，直到获取到设置了 TXEOF 位的描述符为止。

在接收（S2MM）通道上，当数据包开始被接收时，AXI MCDMA 会用 RXSOF 标记描述符，向软件指示与该描述符相关联的数据缓冲区包含数据包的起始。如果接收的数据包字节数比描述符中指定的更长，则使用下一个描述符缓冲区来存储剩余的接收数据包。此抓取和存储过程会持续，直到整个接收数据包被传输完毕。当接收到数据包末尾时，正在处理的描述符会被 AXI MCDMA 标记为 RXEOF = 1。这向软件指示与该描述符相关联的缓冲区包含数据包的结束。每个描述符的状态字段包含该特定描述符实际传输的字节数。软件可以通过从 RXSOF 描述符开始逐一遍历描述符来确定接收数据包总共传输了多少字节。

MM2S 可以通过以下编程顺序进行设置：

1. 启用所需的通道。（也可以在步骤7之后执行）。
2. 编程所有已启用通道的当前描述符（CD）寄存器。如果 IP 配置为 address_width > 32 (c_addr_width > 32)，则编程相应的 MSB 寄存器。如果启用了每通道的软件复位参数，则在通用 MM2S 通道控制寄存器中编程软件复位超时寄存器。

Resets

The axi_resetn signal needs to be asserted a minimum of 16 of the slowest clock cycles and needs to be synchronized to s_axi_lite_aclk. AXI MCDMA can also be reset by writing to the reset bit of control register. Resetting MM2S also resets S2MM and vice-versa.

Programming Sequence

AXI MCDMA operation requires a memory-resident data structure that holds the list of MCDMA operations to be performed. This list of instructions is organized into what is referred to as a descriptor chain. Each descriptor has a pointer to the next descriptor to be processed. The last descriptor in the chain points back to the first descriptor in the chain. Scatter Gather operation allows a packet to be described by more than one descriptor. A typical use for this feature is to allow storing or fetching of headers from a location in memory and payload data from another location. Software applications that take advantage of this can improve throughput.

To delineate packets in a buffer descriptor chain, the Start of Frame bit (TXSOF) and End of Frame bit (TXEOF) are utilized. When the MCDMA fetches a descriptor with the TXSOF bit set, the start of a packet is triggered. The packet continues with fetching the subsequent descriptors until it fetches a descriptor with the TXEOF bit set.

On the receive (S2MM) channel, when a packet starts to be received, the AXI MCDMA marks the descriptor with an RXSOF indicating to the software that the data buffer associated with this descriptor contains the beginning of a packet. If the packet being received is longer in the byte count than what was specified in the descriptor, the next descriptor buffer is used to store the remainder of the receive packet. This fetching and storing process continues until the entire receive packet has been transferred. The descriptor being processed when the end of the packet is received is marked by AXI MCDMA with an RXEOF = 1. This indicates to the software that the buffer associated with this descriptor contains the end of the packet. The status field of each descriptor contains the number of bytes actually transferred for that particular descriptor. The software can determine the total number of bytes transferred for the receive packet by walking from the RXSOF descriptor through the descriptor chain to the RXEOF descriptor. The Scatter Gather continues to fetch extra descriptors and store. Scatter Gather operations begin with the setting up of control registers and descriptor pointers.

The MM2S can be setup using the following programming sequence:

1. Enable the required channels. (can be also performed after step 7).
2. Program the Current Descriptor (CD) registers of all the enabled channels. If the IP is configured for address_width > 32 (c_addr_width > 32), program the corresponding MSB registers. If soft reset per channel parameter is enabled, program the soft reset timeout register in common MM2S channel control register.

3. 编程通道控制寄存器的 CHANNEL.Fetch 位。

注意：此时，这些光盘无法重新编程。

4. 通过编程 MCDMA.RS 位（0x000）启动 MCDMA。

5. 编程中断阈值；启用中断。

6. 如果适用，编程队列调度器寄存器。

7. 对通道的 TD 寄存器进行编程。如果 IP 配置为 `address_width` > 32 （`c_addr_width` > 32)，则编程相应的 MSB 寄存器。编程特定通道的 TD 会触发获取该通道对应的 BD。 8. 如果启用了每个通道的软复位，可以通过以下步骤进行错误处理。 a. 检查 MM2S 通道中断监控寄存器以获取错误中断的通道号信息 b. 检查 MM2S 错误寄存器以获取错误类型信息 c. 检查相应通道状态寄存器的第 7 位（Err Irq） d. 如果相应通道状态寄存器的第 7 位被置位，通过向通道控制寄存器的软_复位位写入 '1' 来重置对应通道 e. 等待通道状态寄存器上的 halt_complete 位为 '1' 后重新启用通道 f. 当 halt_complete 被置位后，清除通道控制寄存器上的软_复位位及通道获取或运行/停止位 g. 重新启用通道

9. 如果每个通道的软复位已启用，并且用户在没有任何错误情况的情况下插入软复位，则继续执行步骤(d)、(e)、(f)和(g)。

MCDMA 调度器一旦第一个 TD 被编程就会启动，并会随着其余 TD 的编程逐渐调整。

S2MM 可以通过以下编程顺序进行设置：

1. 启用所需的通道（也可以在第6步之后进行）。 2. 编程通道的CD寄存器。如果IP配置为 `address_width` > 32(`c_addr_width` > 32)，则编程相应的MSB寄存器。 3. 编程通道控制寄存器的CHANNEL.Fetch位。注意：此时，CD无法重新编程。 4. 通过编程MCDMA.RS位（0x500）启动MCDMA。 5. 编程中断阈值；启用中断。 6. 编程通道的TD寄存器。如果IP配置为 `address_width` > 32(`c_addr_width` > 32)，则编程相应的 MSB 寄存器。对特定通道的 TD进行编程会触发相应通道BD的获取。

3. Program the CHANNEL.Fetch bit of channel control registers.

   Note: At this point, the CDs cannot be re-programmed.

4. Start the MCDMA by programming MCDMA.RS bit (0x000).
5. Program the Interrupt threshold values; Enable Interrupts.
6. Program the Queue Scheduler register, if applicable.
7. Program the TD register of channels. If the IP is configured for `address_width` > 32 (`c_addr_width` > 32), program the corresponding MSB registers. Programming the TDs of a particular channel triggers the fetching of the BDs for the respective channels.
8. If soft reset per channel is enabled, error handling can be performed by the following steps.
   a. Check MM2S channel interrupt monitor register to get information of the channel number of error interrupt
   b. Check MM2S error register to get information on the type of error
   c. Check the corresponding channel status register bit 7 (Err Irq)
   d. In case bit 7 of the corresponding channel status register is set, reset the corresponding channel by writing a value of '1' to the soft_reset bit of the channel control register
   e. Wait for halt_complete bit to be '1' on channel status register to re-enable the channel
   f. After halt_complete is set, remove the soft_reset and the channel fetch or run/stop bit on the channel control register
   g. Re-enable the channel by configuring the run/stop bit and corresponding current descriptors and BD tail address
9. If soft reset per channel is enabled, and there is insertion of soft reset by user without any error scenario, proceed with steps (d),(e),(f), and (g).

The MCDMA schedulers start as soon as the first TD is programmed and gradually adapt as the remaining TDs are programmed.

The S2MM can be setup using the following programming sequence:

1. Enable the required channels (can be also be performed after step 6).
2. Program the CD registers of the channels. If the IP is configured for `address_width` > 32 (`c_addr_width` > 32), program the corresponding MSB registers.
3. Program the CHANNEL.Fetch bit of channel control registers.

   Note: At this point, the CDs cannot be re-programmed.

4. Start the MCDMA by programming MCDMA.RS bit (0x500).
5. Program the interrupt thresholds; Enable Interrupts.
6. Program the TD register of channels. If the IP is configured for `address_width` > 32 (`c_addr_width` > 32), program the corresponding MSB registers. Programming the TDs of a particular channel triggers the fetching of the BDs for the respective channels.

7. 如果启用了每通道参数的软复位，可以通过以下步骤进行错误处理。

   a. 检查 S2MM 通道中断监控寄存器，以获取导致错误的通道号信息b. 检查 S2MM 错误寄存器，以获取错误类型信息c. 检查对应通道状态寄存器的第 7 位（Err Irq）d. 如果对应通道状态寄存器的第 7 位被置位，通过向通道控制寄存器的软复位位写入 '1' 来重置相应通道e. 等待通道状态寄存器的 halt_complete 位为 '1' 后重新启用通道f. 在 halt_complete 位被置位后，清除软复位位（soft_reset）及通道控制寄存器的 fetch 或 run/stop 位g. 通过配置 run/stop 位及对应的当前描述符和 BD 尾地址来重新启用通道

8. 如果启用了每通道参数的软复位，并且用户在没有任何错误情况的情况下插入软复位，则继续执行步骤(d)、(e)、(f)和(g)。

中断

AXI MCDMA 为每个通道提供中断输出。每个通道都有自己的状态寄存器，可用于读取通道状态。每个通道都维护 IOC 和延迟中断。以下示例说明了其行为。

示例：

假设 CH1 的 IOC 阈值被设置为 5，CH2 的 IOC 阈值被设置为 2，CH3 的 IOC 阈值被设置为 1。MCDMA 在 CH1 上处理了三个数据包，在 CH2 上处理了两个数据包，在 CH3 上处理了一个数据包。此场景导致 CH2 和 CH3 的中断输出上触发了 IOC 中断。CH1 仅处理了三个数据包（但其阈值为五），因此其延迟定时器开始计时，定时器到期后会触发 IRQ 延迟中断。在这种操作模式下，如果任何通道（无论是 S2MM 还是 MM2S）出现错误情况，所有通道的中断都会被触发。

当检测到错误时，也会生成中断。在发生错误的情况下，如果禁用了每通道软复位参数，MCDMA 会正常停止，并且必须重置 MCDMA 以清除错误。当启用每通道软复位参数时，MCDMA 会继续处理其余通道，直到该通道被软复位并重新编程。当 MCDMA 接收或发送的包数达到通道控制寄存器中 IOC 阈值字段所述的数量时，会设置 IOC 中断。

7. If soft reset per channel parameter is enabled, error handling can be performed by the following steps.
   a. Check S2MM channel interrupt monitor register to get information of the channel number which caused the error
   b. Check S2MM error register to get information on the type of error
   c. Check the corresponding channel status register bit 7 (Err Irq)
   d. In case bit 7 of the corresponding channel status register is set, reset the corresponding channel by writing a value of '1' to the soft reset bit of the channel control register
   e. Wait for halt_complete bit to be '1' on channel status register to re-enable the channel
   f. After halt_complete is set, remove the soft_reset and the channel fetch or run/stop bit on the channel control register
   g. Re-enable the channel by configuring the run/stop bit and corresponding current descriptors and BD tail address
8. If soft reset per channel parameter is enabled, and there is insertion of soft reset by user without any error scenario, proceed with steps (d),(e),(f), and (g).

Interrupts

AXI MCDMA provides interrupt outputs per channel. Each channel has its own Status register that can be used to read the status of the channel. IOC and Delay interrupts are maintained for each channel. The Following example explains the behavior.

Example:

Assume that the IOC threshold of CH1 is programmed with a value of 5, IOC threshold of CH2 is programmed with 2, and IOC threshold of CH3 with 1. The MCDMA processes three packets on CH1, two on CH2, and one on CH3. This scenario results in the IOC interrupt getting set on the interrupt outputs of CH2 and CH3. The CH1 has processed only three packets (but programmed for five) so its delay timer starts, which sets the IRQ Delay Interrupt after it expires. In this mode of operation, if any channel (either S2MM or MM2S) hits an error condition, the interrupts of all the channels are asserted.

Interrupts are also generated when an error is detected. In case of an error, MCDMA halts gracefully when soft reset per channel parameter is disabled and MCDMA has to be reset to clear the error. When soft reset per channel parameter is enabled, the MCDMA continues with the rest of the channels till the channel is soft reset and re-programmed. The IOC Interrupt is set when the MCDMA receives or transmits the number of packets as mentioned in the IOC threshold field of the Channel Control register.

当接收或发送的两个数据包之间存在较长间隔时，会设置延迟中断。延迟计数器在检测到 EOF 时启动（即 AXI4-Stream 接口上的 TLAST）。如果在计数器到期之前没有检测到 SOF（即 TLAST 之后的 TVALID），则会触发中断。

S2MM上的数据包丢失

AXI MCDMA 在某些情况下具有丢弃到达 S2MM 通道的数据包的功能。这确保后续的数据包不会被限流。当数据包到达 AXI4-Stream 接口时，AXI MCDMA 会处理和/或丢弃这些数据包。

AXI 内存控制器 在以下情况下，DMA 会在 S2MM 上丢弃接收到的数据包：

- 如果某个特定通道未启用，并且有一个数据包到达，其 TDEST 对应于该通道 o 同一个频道。
- 如果在任何信道上，在数据包到达时，MCDMA用尽了BD（即，当前描述符= 尾部描述符并且内部BD队列为空）。
- 如果 MCDMA 没有启动。

被丢弃的数据包不被归类为已处理。

可以配置 IP 当通道耗尽 BD 时禁用数据包丢弃功能。如果禁用数据包丢弃，MCDMA 在通道启用且 BD 耗尽时将等待 BD 被加载。当通道未启用或 MCDMA 未启动时，数据包仍然会被丢弃。

重要！在触发数据包丢弃后，即使 *TD* 被编程为继续 *BD* 链，整个数据包也会被丢弃。*AXI MCDMA* 会跟踪每个通道的数据包丢弃情况，并在相应通道的数据包丢弃寄存器中提供状态。

尽管当 AXI MCDMA 未启动时会丢弃数据包，但统计信息直到 MCDMA 进入运行模式才会更新。已经在处理中的数据包永远不会被丢弃。您必须确保有足够的 BD 可用来服务数据包，以避免 AXI4-Stream 接口上的限流。如果状态流启用，那么每个被丢弃的数据包对应的状态流数据也会被丢弃。

MM2S 中的队列调度程序

AXI MCDMA 提供了一种在 MM2S 端对数据包进行优先级排序和发送的机制。它提供了三种不同的数据包优先级或调度方法，如下所示：

The Delay Interrupt is set when there is a long gap between two packets that are received or transmitted. The delay counter starts when EOF is detected (that is, TLAST on the AXI4-Stream interface). The interrupt is set if a SOF (that is, a TVALID following a TLAST) is not detected before the counter expires.

Packet Drop on S2MM

AXI MCDMA has a feature to drop the packets arriving on the S2MM channel under certain circumstances. This ensures that subsequent packets are not throttled. AXI MCDMA processes and/or drops the packets when they arrive on the AXI4-Stream interface.

The AXI MCDMA drops an incoming packet on S2MM under the following circumstances:

- If a particular channel is not enabled and a packet arrives with that TDEST corresponding to the same channel.
- If for any channel, at the time of the packet arrival, the MCDMA runs out of BDs (that is, Current Descriptor = Tail Descriptor and the internal BD queue is empty).
- If the MCDMA is not started.

A packet that is dropped is not classified as processed.

The IP can be configured to disable the packet drop feature when the channel runs out of BDs. If the packet drop is disabled, the MCDMA waits for the BD to be loaded if the channel is enabled and runs out of BDs. When channel is not enabled or MCDMA is not started, the packet is still dropped.

IMPORTANT! *After the packet drop is triggered, the entire packet is dropped even if the TD is programmed to continue with the BD chain. AXI MCDMA keeps track of the packet drop for each channel and the status is provided in the Packet Drop register for the respective channel.*

Although AXI MCDMA drops packets when not started, the statistics are not updated until the MCDMA is put in run mode. A packet that is already under process is never dropped. You must ensure that enough BDs are available to service the packet to avoid throttling on AXI4-Stream interface. If the Status Stream is enabled, then for every dropped packet the corresponding Status Stream data is also dropped.

Queue Scheduler in MM2S

AXI MCDMA provides a mechanism to prioritize and send the packets on the MM2S side. It provides three different method of prioritization or scheduling of packets as follows:

严格优先级调度类型

当必须在 MCDMA 在低优先级通道上发送数据包时传输高优先级数据包时，会使用这种类型的调度器。通道 0 (TDEST = 0) 优先级最高，而通道 15 (TDEST = 15) 优先级最低。

以下事件顺序解释了该调度器的操作。例如，如果 MCDMA 配置了四个通道（CH1、CH2、CH3 和 CH4），则 CH1 拥有最高优先级，CH4 拥有最低优先级。迭代从 CH1 开始。CH1 的 BD 被取出并处理，直到 BD 队列完全耗尽（即直到当前描述符 = 尾部描述符）。在 CH1 被服务期间，其他通道处于空闲状态且没有 BD 被处理。

当 CH1 的 BD 队列耗尽时，调度器开始读取和处理 CH2 的 BD。如果 CH1 的 BD 没有提交，调度器会继续处理 CH2 的 BD。当 CH2 的 BD 链耗尽时，调度器会切换到 CH3。当 CH3 的 BD 链耗尽时，它会切换到 CH4。如果在此期间的任何时间（当 CH2、CH3 或 CH4 正在服务时）CH1 的 BD 被重新提交，调度器会停止处理当前通道的任何新 BD 并切换回 CH1。每当检测到带有 EOF 位的 BD 时，MCDMA 会检查通道队列的状态。如果有任何高优先级队列非空，它会停止对当前通道（即正在处理的通道）上的包进行进一步处理，并切换回高优先级通道。被禁用的通道总是会被跳过。

对高优先级通道的BD链进行重新编程会导致该通道被服务。

加权轮询 (WRR)

这种类型的调度器可用于需要以循环方式向每个通道发送可预测数量的数据包的情况。每个通道都有一个与之相关的权重。

以下事件序列解释了此调度器的操作。例如，假设 MCDMA 配置了三个通道（CH1、CH2 和 CH3），并且它们的权重分别设置为 3、2 和 1。只要 BDs 可用，MCDMA 将处理 BDs，在 CH1 上连续发送三个数据包，然后在 CH2 上发送两个数据包，在 CH3 上发送一个数据包。处理最后一个数据包后，将重复相同的序列。如果任何通道的 BDs 用完，该通道将被跳过，直到 BDs 可用为止。被禁用的通道总是被跳过。您可以随时重新设置权重。但新值仅在迭代完成后生效。同样，您也可以随时启用/禁用通道，但只有在迭代结束或处理带有 EOF 位的 BD 时才生效。

下图展示了 WRR 调度器。

Strict Priority Type of Scheduler

This type of scheduler is used when one has to transfer high-priority packets while the MCDMA is sending packets on low-priority channels. The Channel 0 (TDEST = 0) has the highest priority while Channel 15 (TDEST = 15) has the lowest priority.

The following sequence of events explain the operation of this scheduler. For Example, If MCDMA is configured for four channels (CH1, CH2, CH3, and CH4), then CH1 has the highest priority and CH4 has the lowest priority. The iteration starts with CH1. The BDs of CH1 are fetched and processed until the BD queue is completely exhausted (that is, until Current Descriptor = Tail Descriptor). While the CH1 is being serviced, other channels are idle and no BDs are processed.

When the BD queue of CH1 is exhausted, the scheduler starts reading and processing the BDs of CH2. If CH1 BDs are not submitted, the scheduler continues to process BDs of CH2. The scheduler moves to CH3 when BD chain of CH2 is exhausted. It then moves to CH4 when BD chain of CH3 is exhausted. If at any point of time in between (while CH2, CH3, or CH4 is being serviced) BDs of CH1 are re-submitted, the scheduler stops processing any new BDs for the current Channel and switch back to CH1. Whenever a BD with EOF bit is detected, the MCDMA checks the status of the Channel queues. If any high priority queue is non-empty, it stops further processing of packets on the channel (that is, channel under process) and switches back to a high-priority channel. Channels that are disabled are always skipped.

Re-programming of the BD chain of high-priority channels results in that channel being serviced.

Weighted Round Robin (WRR)

This type of scheduler can be used in cases where there is a need to send a predictable number of packets per channel in a round robin manner. Each channel has a weight associated with it.

The following sequence of events explains the operation of this scheduler. For example, assume MCDMA is configured for three channels (CH1, CH2, and CH3), and their weights have been programmed as 3, 2, and 1 respectively. As long as the BDs are available, the MCDMA processes the BDs to send three packets on CH1 in succession followed by two packets on CH2 and one packet on CH3. The same sequence is repeated after processing the last packet. If any channel runs out of BDs, it is skipped until the BDs are available. Channels that are disabled are always skipped. You can re-program the weights at any time. However, the new values come into effect only when the iteration is complete. Similarly, you can also enable/disable channels at any time, but it comes into effect only when the iteration is over or when a BD with an EOF bit is processed.

The following figure demonstrates the WRR scheduler.

图5：WRR 调度器

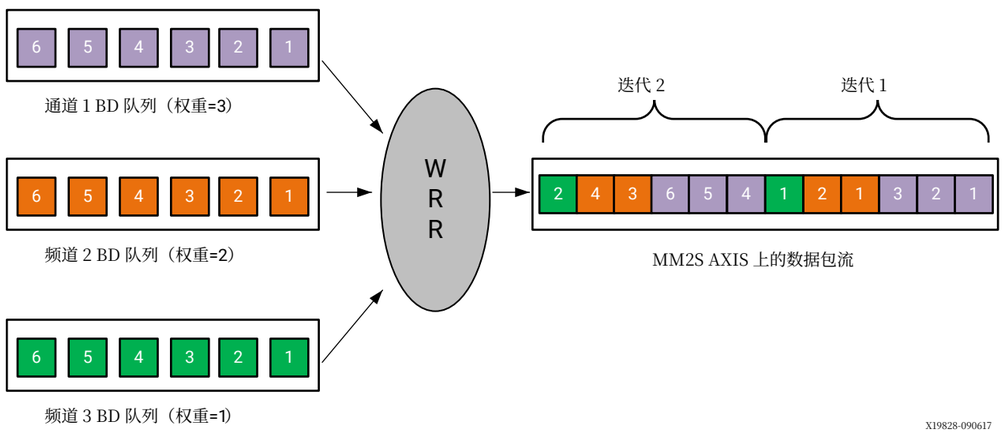

加权轮询–公平分配

这种类型的调度器可以在需要以轮询方式按每个通道发送可预测数量的数据包，但在时间上公平分配的情况下使用。每个通道都有一个与之关联的权重。

以下事件顺序解释了该调度器的操作。例如，假设 MCDMA 配置了三个通道（CH1、CH2 和 CH3），它们的权重分别设置为 3、2 和 1。只要 BDs（缓冲描述符）可用，MCDMA 就会处理 BDs，依次在 CH1 发送一个数据包，然后在 CH2 发送一个数据包，再在 CH3 发送一个数据包。每完成一轮仲裁后，各通道的权重会相应递减。在下一轮中，CH1 发送一个数据包，接着 CH2 发送一个数据包。CH3 不发送数据包，因为其权重为零。该顺序会重复，直到所有通道的仲裁权重变为零。如果任何通道用完了 BDs，则会被跳过，并在下一次迭代中再次服务，直到 BDs 可用为止。

被禁用的通道总是会被跳过。您可以随时重新设置权重。然而，只有在迭代完成后，新值才会生效。同样，您也可以随时启用或禁用通道，但它只有在迭代结束后或处理带有 EOF 位的 BD 时才会生效。

下图展示了 WRR-FD 调度器。

Figure 5: **WRR Scheduler**

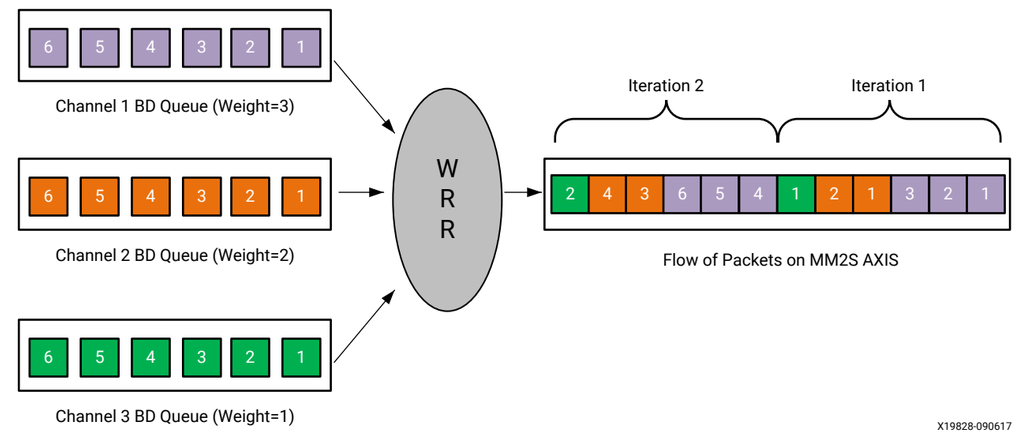

Weighted Round Robin – Fair Distribution

This type of scheduler can be used in cases where there is a need to send a predictable number of packets per channel in a round robin manner but fairly distributed across the time. Each channel has a weight associate with it.

The following sequence of events explains the operation of this scheduler. For example, assume MCDMA is configured for three channels (CH1, CH2, and CH3) and their weights have been programmed as 3, 2 and 1 respectively. As long as BDs are available, the MCDMA processes the BDs to send one packet on CH1 in succession followed by one packet on CH2 and one packet on CH3. The weights of each channel decremented on completing each round of arbitration. In next round, one packet is sent in CH1 followed by one on CH2. No packet is sent on CH3 because its weight is zero. The sequence is repeated until weights of all the channels in arbitration become zero. If any channel runs out of BDs, it is skipped and serviced again in the next iteration until the BDs are available.

Channels that are disabled are always skipped. You can re-program the weights at any time. However, the new values come into effect only when the iteration is complete. Similarly, you can also enable/disable channels at any time, but it comes into effect only when the iteration is over or when a BD with an EOF bit is processed.

The following figure demonstrates the WRR-FD scheduler.

图6：WRR-FD 调度器

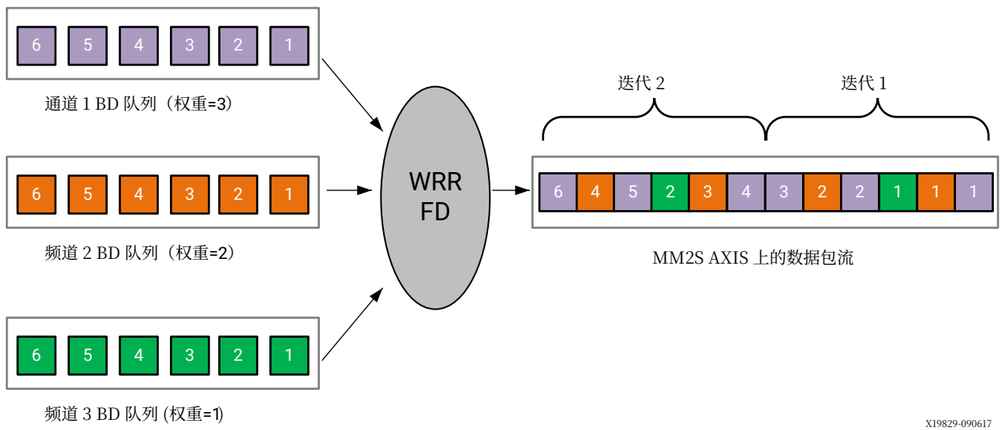

注意：在上述所有情况下，您可以随时更改通道启用/禁用寄存器和权重寄存器。但是，这些更改的效果要到新迭代开始和/或处理带有 EOF 位设置的 BD 时才能看到。

MM2S 路径实现了一个管道，以更快的速度处理 BD。因此，有可能一些 BD 已经被读取并发送去处理。因此，流端口上的输出（或变化）仅在 BD 管道处理时才会显示。例如，在严格优先模式下，当 CH1 队列为空时，CH2 的 BD 会被处理并进入管道。如果现在更新 CH1 的 BD 链，它只有在管道命令执行后才会反映在 AXI4-Stream 端口上。

Figure 6: **WRR-FD Scheduler**

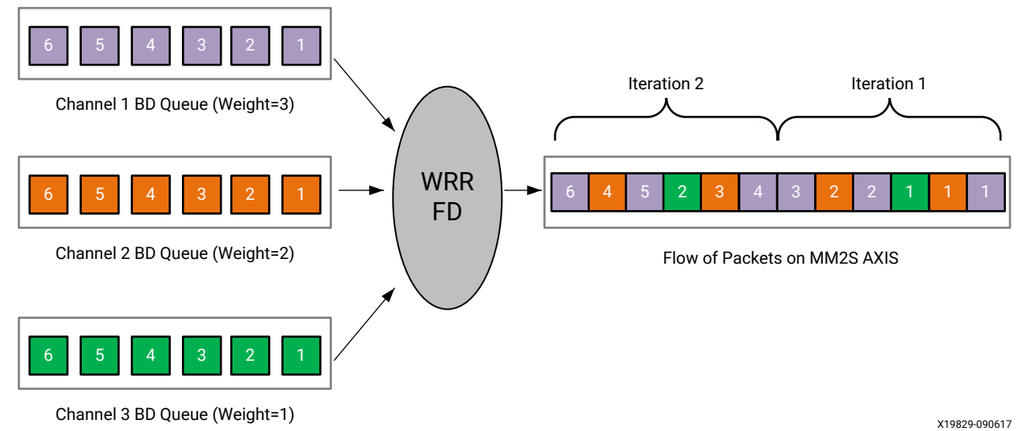

Note: In all the preceding cases, you can change the channel enable/disable register and weight register at any time. However, the effect of these changes is not seen until a new iteration begins and/or a BD with an EOF bit set is processed.

The MM2S path implements a pipeline to process the BDs at a faster rate. Due to this, it is possible that some BDs might have been read and sent for processing. As such, the output (or change) at the streaming port is seen only when the pipeline of BD is processed. For example, in Strict Priority mode, when the CH1 queue gets empty, BDs from CH2 are processed and pipelined. If CH1 BD chain is updated now, it is reflected on the AXI4-Stream port only when the pipelined commands are executed.

第五章

设计流程步骤

本节描述了定制和生成核、约束核，以及特定于该 IP 核的仿真、综合和实现步骤。有关注标准 AMD VivadoTM 设计流程和 IP 集成器的更详细信息，可以参见以下 Vivado 设计套件用户指南：

- *Vivado* 设计套件用户指南：使用 *IP* 集成器设计 *IP* 子系统 *(UG994)*
- *Vivado* 设计套件用户指南：使用 *IP* 进行设计 *(UG896)*
- *Vivado* 设计套件用户指南：入门（*UG910*）
- *Vivado* 设计套件用户指南：逻辑仿真 *(UG900)*

自定义和生成核心

本节包括关于使用 AMD 工具在 AMD VivadoTM 设计套件中定制和生成核心的信息。

如果您正在在 Vivado IP 集成器中自定义和生成核心，请参阅 Vivado 设计套件用户指南：使用 IP 集成器设计 IP 子系统（UG994）以获取详细信息。IP 集成器在验证或生成设计时可能会自动计算某些配置值。要检查这些值是否会更改，请参阅本章中参数的描述。要查看参数值，请在 Tcl 控制台中运行 `validate_bd_design` 命令。

您可以通过使用以下步骤为与 IP 核相关的各种参数指定值，来自定义在您的设计中使用的 IP。

1. 从IP目录中选择IP。
2. 双击所选的 IP，或从工具栏或右键菜单中选择“自定义 IP”命令。

详细信息，请参阅 *Vivado* 设计套件用户指南：使用 *IP* 进行设计 *(UG896)* 和 *Vivado* 设计套件用户指南：入门 *(UG910)*。

本章中的图是 Vivado IDE 的示意图。此处所示的布局可能与当前版本有所不同。

Chapter 5

Design Flow Steps

This section describes customizing and generating the core, constraining the core, and the simulation, synthesis, and implementation steps that are specific to this IP core. More detailed information about the standard AMD Vivado™ design flows and the IP integrator can be found in the following Vivado Design Suite user guides:

- *Vivado Design Suite User Guide: Designing IP Subsystems using IP Integrator* (UG994)
- *Vivado Design Suite User Guide: Designing with IP* (UG896)
- *Vivado Design Suite User Guide: Getting Started* (UG910)
- *Vivado Design Suite User Guide: Logic Simulation* (UG900)

Customizing and Generating the Core

This section includes information about using AMD tools to customize and generate the core in the AMD Vivado™ Design Suite.

If you are customizing and generating the core in the Vivado IP integrator, see the *Vivado Design Suite User Guide: Designing IP Subsystems using IP Integrator* (UG994) for detailed information. IP integrator might auto-compute certain configuration values when validating or generating the design. To check whether the values do change, see the description of the parameter in this chapter. To view the parameter value, run the `validate_bd_design` command in the Tcl console.

You can customize the IP for use in your design by specifying values for the various parameters associated with the IP core using the following steps:

1. Select the IP from the IP catalog.
2. Double-click the selected IP or select the Customize IP command from the toolbar or right-click menu.

For details, see the *Vivado Design Suite User Guide: Designing with IP* (UG896) and the *Vivado Design Suite User Guide: Getting Started* (UG910).

Figures in this chapter are illustrations of the Vivado IDE. The layout depicted here might vary from the current version.

AXI MCDMA 可以在 Vivado IP 目录的以下位置找到：

- AXI_基础设施，通信_&_网络\以太网
- 嵌入式_处理\AXI_基础设施\DMA

要访问 AXI MCDMA，请执行以下操作：

1. 使用 Vivado 设计工具打开现有项目或创建新项目。 2. 打开 IP 目录并导航到任意分类。

3. 双击 `AXI MultiChannel Direct Memory Access` 以打开 AXI MCDMA 自定义 IP 窗口。

注意：本章中的图示为 Vivado 集成设计环境（IDE）的示意图。此布局可能与当前版本有所不同。

如果您正在使用 Vivado IP 集成器自定义和生成核心，请参阅 Vivado 设计套件用户指南：使用 IP 集成器设计 IP 子系统（UG994）以获取详细信息。如本节所述，Vivado IDE 在验证或生成设计时可能会自动计算某些配置值。成功完成 `validate_bd_design` 命令后，您可以查看参数值。

The AXI MCDMA can be found in the following places in the Vivado IP catalog:

- AXI_Infrastructure, Communication_&_Networking\Ethernet
- Embedded_Processing\AXI_Infrastructure\DMA

To access the AXI MCDMA, do the following:

1. Open an existing project or create a new project using the Vivado design tools.
2. Open the IP catalog and navigate to any of the taxonomies.
3. Double-click `AXI MultiChannel Direct Memory Access` to bring up the AXI MCDMA Customize IP window.

Note: Figures in this chapter are illustrations of the Vivado Integrated Design Environment (IDE). This layout might vary from the current version.

If you are customizing and generating the core in the Vivado IP integrator, see the *Vivado Design Suite User Guide: Designing IP Subsystems using IP Integrator* (UG994) for detailed information. Vivado IDE might auto-compute certain configuration values when validating or generating the design, as noted in this section. You can view the parameter value after successful completion of the `validate_bd_design` command.

基本标签

图7：基础标签

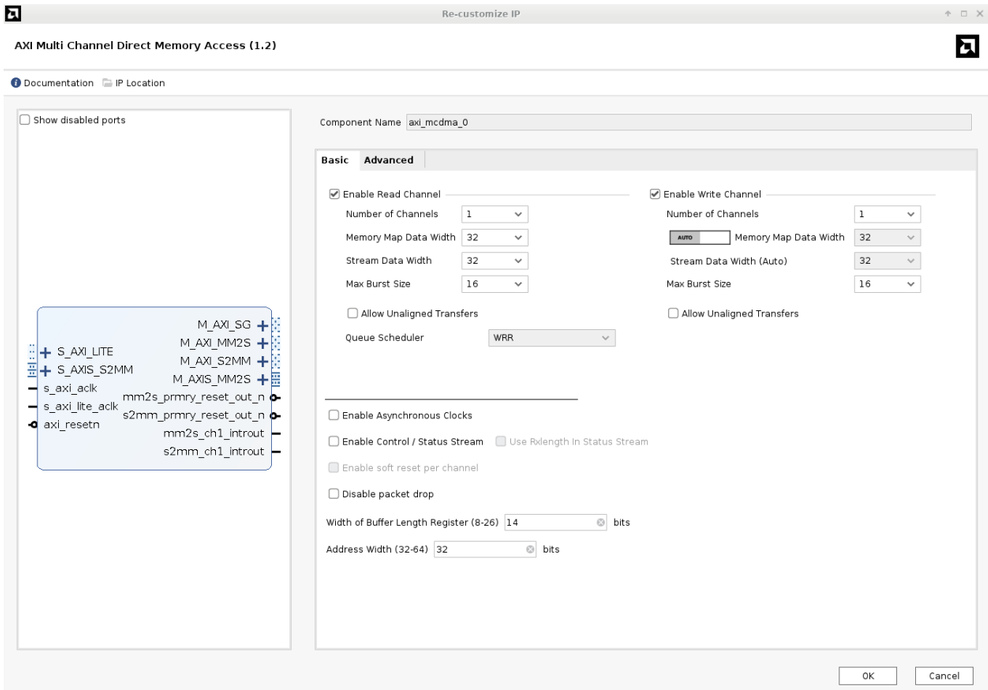

以下是基本选项卡的字段说明。

组件名称

为核心生成的输出文件的基本名称。名称必须以字母开头，并且可以由以下任意字符组成：a-z、0到9，以及“_”。

以下子部分描述仅影响 AXI MCDMA 的 MM2S 通道的选项。

启用读取通道

此选项用于启用或禁用 MM2S 通道。启用 MM2S 通道允许从内存到 AXI4-Stream 的读取传输发生。禁用 MM2S 通道会将逻辑排除在 AXI MCDMA 核心之外。MM2S 通道的输出被固定为零，输入被 AXI MCDMA 忽略。

Basic Tab

Figure 7: **Basic Tab**

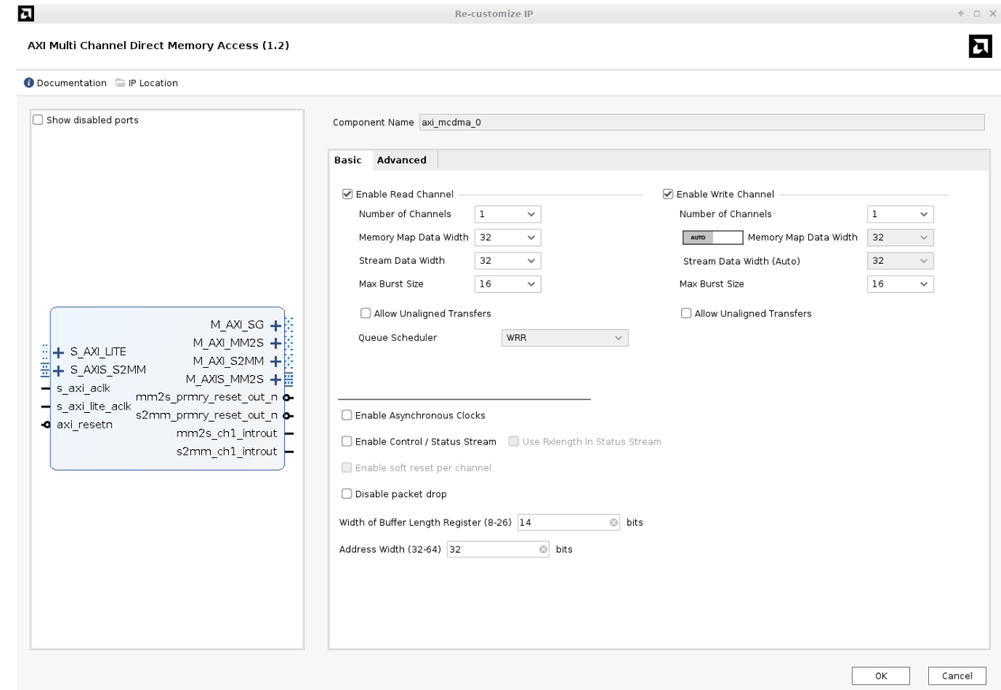

Following are the field descriptions for the Basic tab.

Component Name

The base name of the output files generated for the core. Names must begin with a letter and can be composed of any of the following characters: a- z, 0 to 9, and "_".

The following subsections describe options that affect only the MM2S Channel of the AXI MCDMA.

Enable Read Channel

This option enables or disables the MM2S Channel. Enabling the MM2S Channel allows read transfers from memory to AXI4-Stream to occur. Disabling the MM2S Channel excludes the logic from the AXI MCDMA core. Outputs for the MM2S channel are tied to zero and inputs are ignored by AXI MCDMA.

通道数量

此选项指定通道数量，从一到十六。

存储器映射数据宽度

AXI MM2S 内存映射读取数据总线的数据位宽。有效值为 32、64、128、256、512 和 1024。

流数据宽度

AXI42S AXI4-Stream 数据总线的位宽。该值必须小于或等于内存映射数据宽度。有效值为 8、16、32、64、128、512 和 1024。

最大突发大小

突发分区粒度设置。此设置指定 MM2S 的 AXI4 侧突发周期的最大大小。有效值为 2、4、8、16、32、64、128 和 256。

队列调度器

选择处理 MM2S 缓冲描述符所需的调度器服务类型。当通道数量超过 1 时，您可以在严格优先级、WRR、WRR-FD 或可编程之间选择任何一个值。当通道数量为 1 时，此值设置为严格优先级（且无法更改）。

允许未对齐传输

启用或禁用 MM2S 数据重排引擎（DRE）。选中时，DRE 被启用，并允许在 MM2S 内存映射数据通路上按字节（8 位）级别进行数据重排。对于 MM2S 通道，数据从内存中读取。如果启用了 DRE，数据读取可以从任意缓冲区地址字节偏移开始，并且读取的数据会对齐，使得读取的第一个字节是 AXI4-Stream 输出的第一个有效字节。

注意：如果相应通道的 DRE 被禁用，则不支持未对齐的缓冲区、源地址或目标地址。在 DRE 被禁用的情况下使用未对齐地址会产生未定义的结果。DRE 支持仅适用于 512 位及以下的 AXI4-Stream 数据宽度设置。

以下选项仅影响 AXI MCDMA 核的 S2MM 通道。

启用写入通道

此设置用于启用或禁用 S2MM 通道。启用 S2MM 通道允许从 AXI4-Stream 到内存的写入传输。禁用 S2MM 通道会将逻辑从 AXI MCDMA 核心中排除。S2MM 通道的输出被固定为零，输入则被 AXI MCDMA 忽略。

Number of Channels

This option specifies the number of channels from one to 16.

Memory Map Data Width

Data width in bits of the AXI MM2S Memory Map Read data bus. Valid values are 32, 64, 128, 256, 512, and 1024.

Stream Data Width

Data width in bits of the AXI42S AXI4-Stream data bus. This value must be equal or less than the Memory Map Data Width. Valid values are 8, 16, 32, 64, 128, 512, and 1024.

Max Burst Size

Burst partition granularity setting. This setting specifies the maximum size of the burst cycles on the AXI4 side of MM2S. Valid values are 2, 4, 8, 16, 32, 64, 128, and 256.

Queue Scheduler

Select the type of scheduler service required to process the MM2S Buffer Descriptors. When the number of channels is more than 1, you can select any value between Strict Priority, WRR, WRR-FD, or Programmable. This value is set to Strict Priority (and cannot be altered) when the number of channels is 1.

Allow Unaligned Transfers

Enables or disables the MM2S Data Realignment Engine (DRE). When checked, the DRE is enabled and allows data realignment to the byte (8 bits) level on the MM2S Memory Map datapath. For the MM2S channel, data is read from memory. If the DRE is enabled, data reads can start from any Buffer Address byte offset, and the read data is aligned such that the first byte read is the first valid byte out on the AXI4-Stream.

Note: If the DRE is disabled for the respective channel, unaligned Buffer, Source, or Destination Addresses are not supported. Having an unaligned address with the DRE disabled produces undefined results. DRE support is only available for the AXI4-Stream data width setting of 512 bits and under.

The following options affect only the S2MM Channel of the AXI MCDMA core.

Enable Write Channel

This setting enables or disables the S2MM Channel. Enabling the S2MM Channel allows write transfers from AXI4-Stream to memory. Disabling the S2MM Channel excludes the logic from the AXI MCDMA core. Outputs for the S2MM channel are tied to zero and inputs are ignored by AXI MCDMA.

通道数量

此选项允许您选择 1 到 16 个通道。

存储器映射数据宽度

AXI S2MM 内存映射写数据总线的数据位宽。有效值为 32、64、128、256、512 和 1024。

流数据宽度

AXI S2MM AXI4-Stream 数据总线的数据宽度（以位为单位）。此值必须等于或小于存储器映射数据宽度。有效值为 8、16、32、64、128、512 和 1024。

最大突发大小

此设置指定 S2MM 通道的 AXI4 侧突发周期的最大大小。换句话说，此设置指定突发映射的粒度。有效值为 2、4、8、16、32、64、128 和 256。

允许未对齐传输

启用或禁用 S2MM 数据重新对齐引擎 (DRE)。选中时，DRE 被启用，并允许在 S2MM 内存映射数据通路上按字节（8 位）级进行数据重新对齐。对于 S2MM 通道，数据被写入到内存中。如果启用 DRE，数据写入可以从任何缓冲地址字节偏移开始，并且写入的数据会进行对齐，使得在 S2MM AXI4-Stream 上接收到的第一个有效字节被写入指定的未对齐地址偏移。

注意：如果相应通道的 DRE 被禁用，则不支持未对齐的缓冲区、源地址或目标地址。在 DRE 被禁用的情况下使用未对齐地址会产生未定义的结果。DRE 支持仅适用于 512 位及以下的 AXI4-Stream 数据宽度设置。

启用异步时钟

此设置提供独立操作 MM2S 接口（`m_axi_mm2s_aclk`）、S2MM 接口（`m_axi_s2mm_aclk`）和散点聚集接口（`m_axi_sg_aclk`）的能力。当启用异步时钟时，`s_axi_lite_aclk` 的频率必须小于或等于 `m_axi_sg_aclk`。同样，`m_axi_sg_aclk` 必须小于或等于 `m_axi_mm2s_aclk` 和 `m_axi_s2mm_aclk` 中较慢的一个。处于同步模式时，IP 仅暴露 `s_axi_lite_aclk` 和 `s_axi_aclk`。`s_axi_lite_aclk` 应小于或等于 `s_axi_aclk` 频率。

Number of Channels

This option allows you to choose a number of channels from 1 to 16.

Memory Map Data Width

Data width in bits of the AXI S2MM Memory Map Write data bus. Valid values are 32, 64, 128, 256, 512, and 1024.

Stream Data Width

Data width in bits of the AXI S2MM AXI4-Stream Data bus. This value must be equal or less than the Memory Map Data Width. Valid values are 8, 16, 32, 64, 128, 512, and 1024.

Max Burst Size

This setting specifies the maximum size of the burst cycles on the AXI4 side of the S2MM channel. In other words, this setting specifies the granularity of burst mapping. Valid values are 2, 4, 8, 16, 32, 64, 128, and 256.

Allow Unaligned Transfers

Enables or disables the S2MM Data Realignment Engine (DRE). When checked, the DRE is enabled and allows data realignment to the byte (8 bits) level on the S2MM Memory Map datapath. For the S2MM channel, data is written to memory. If the DRE is enabled, data writes can start from any Buffer Address byte offset, and the write data is aligned such that the first valid byte received on the S2MM AXI4-Stream is written to the specified unaligned address offset.

Note: If the DRE is disabled for the respective channel, unaligned Buffer, Source, or Destination Addresses are not supported. Having an unaligned address with the DRE disabled produces undefined results. DRE support is only available for the AXI4-Stream data width setting of 512 bits and under.

Enable Asynchronous Clocks

This setting provides the ability to operate the MM2S interface (`m_axi_mm2s_aclk`), S2MM interface (`m_axi_s2mm_aclk`), and the Scatter Gather Interface (`m_axi_sg_aclk`) asynchronously from each other. When asynchronous clocks are enabled, the frequency of `s_axi_lite_aclk` must be less than or equal to `m_axi_sg_aclk`. Likewise, `m_axi_sg_aclk` must be less than or equal to the slower of `m_axi_mm2s_aclk` and `m_axi_s2mm_aclk`. When in synchronous mode, the IP exposes only `s_axi_lite_aclk` and `s_axi_aclk`. The `s_axi_lite_aclk` should be less than or equal to the `s_axi_aclk` frequency.

启用控制/状态流

选中此选项可启用 AXI4 控制和状态流。AXI4 控制流允许将与 MM2S 通道相关的用户应用元数据传输到目标 IP。MM2S 分散-聚集帧起始 (SOF) 描述符的用户应用字段 0 到 4（传输帧起始 TXSOF =1）会与通过 `m_axis_mm2s` 流接口传输的关联数据包一起，在 `m_axis_mm2s_cntrl` 流接口上传输。AXI4 状态流允许从目标 IP 接收与 S2MM 通道相关的用户应用元数据。接收到的状态数据包会填充 S2MM 分散-聚集帧结束 (EOF) 描述符的用户应用字段 0 到 4，即与数据包结束关联的描述符。此状态由更新描述符的状态字中的接收帧结束 (RXEOF= 1) 指示。

在状态流中使用 *RxLength*

如果启用了控制/状态流，选中此项允许 AXI MCDMA 使用由 S2MM 目标 IP 在状态包的 App4 字段中提供的接收长度字段。这为 AXI MCDMA 提供了一个预先确定的接收字节计数，使 AXI MCDMA 能够命令要传输的确切字节数。此选项为需要更高吞吐量的系统提供了更高带宽的解决方案。在此配置下，S2MM 目标 IP 可以提供状态包 APP4 的接收长度字段中指定的所有数据字节。

缓冲区长度寄存器的宽度

该整数值指定控制字段缓冲区长度和在分散-聚合描述符中传输的状态字段字节的有效位数。它还指定在启用“使用接收长度”(Use Rxlength) 时，状态流 App4 字段的 RX 长度中的有效位数。长度宽度直接对应于在分散-聚合描述符中指定的字节数或在 App4.RxLength 中指定的字节数。字节数等于 (2^Length_Width)-1。因此，长度宽度为 26 时，字节数为 67,108,863 字节。

禁用数据包丢弃

当启用此功能时，如果一个通道处于活动状态且BD用尽，MCDMA会等待BD被加载。然而，如果通道不处于活动状态或MCDMA尚未启动，则数据包会被丢弃。

启用每通道软复位

在以下情况下，此选项是可配置的：

1. 当同时启用 MM2S 和 S2MM 且 S2MM 通道数和 MM2S 通道数都大于 1 时。

Enable Control/Status Stream

Checking this option enables the AXI4 Control and Status Streams. The AXI4 Control stream allows user application metadata associated with the MM2S channel to be transmitted to a target IP. User application fields 0 through 4 of an MM2S Scatter-Gather Start Of Frame (SOF) descriptor Transmit Start Of Frame (TXSOF =1) are transmitted on the `m_axis_mm2s_cntrl` stream interface along with an associated packet being transmitted on the `m_axis_mm2s` stream interface. The AXI4 Status stream allows user application metadata associated with the S2MM channel to be received from a target IP. The received status packet populates user application fields 0 to 4 of an S2MM Scatter-Gather End of Frame (EOF) descriptor. That is the descriptor associated with the end of packet. This condition is indicated by a Receive End of Frame (RXEOF = 1) in the status word of the updated descriptor.

Use RxLength in Status Stream

If the Control/Status Stream is enabled, checking this allows AXI MCDMA to use a receive length field that is supplied by the S2MM target IP in the App4 field of the status packet. This gives AXI MCDMA a pre-determined receive byte count, allowing AXI MCDMA to command the exact number of bytes to be transferred. This option provides for a higher bandwidth solution for systems needing greater throughput. In this configuration, the S2MM target IP can supply all data bytes specified in the receive length field of status packet APP4.

Width of Buffer Length Register

This integer value specifies the number of valid bits used for the Control field buffer length and Status field bytes transferred in the Scatter-Gather descriptors. It also specifies the number of valid bits in the RX Length of the Status Stream App4 field when Use Rxlength is enabled. The length width directly correlates to the number of bytes being specified in a Scatter-Gather descriptor or the number of bytes being specified in App4.RxLength. The number of bytes is equal to (2^Length_Width)-1. So, a Length Width of 26 gives a byte count of 67,108,863 bytes.

Disable Packet Drop

When this feature is enabled, if a channel is active and runs out of BDs, the MCDMA waits for the BDs to be loaded. However, if the channel is not active or the MCDMA has not started, the packet is dropped.

Enable Soft Reset Per Channel

This option is configurable in the following cases:

1. When both MM2S and S2MM are enabled and number of S2MM channels and number of MM2S channels are greater than 1.

2. 当仅启用 MM2S 且通道数量大于 1 时。
3. 当仅启用 S2MM 且通道数量大于 1 时。

启用此选项会将每个通道的重置隔离，以处理每个通道上的独立下游模块。系统会等待特定通道中的作业完成，然后再继续下一个通道。

如果 MM2S 通道发生任何错误，您需要检查通道中断监视器寄存器以了解出错的通道号，并通过编程相应通道的通道控制寄存器来发出 `soft_reset` 。在软复位时，通道进入停止状态，系统会重置其子模块和内部缓冲区。在此期间，相应通道被禁用，并且对应通道的 `mm2s_prmry_reset_out_perch_n` 端口为低电平。一旦软复位完成，通道状态寄存器上的停止完成位变为高电平，以向用户标记软复位的完成。

如果 `soft_reset` 不成功，系统会等待超时周期结束。在 `soft_reset` 完成后，`mm2s_prmry_reset_out_perch_n` 端口会回到该通道的高电平状态。然后系统会继续处理下一个通道。

要通过编程相应的通道控制寄存器为特定的 MM2S 通道应用 `soft_reset` ，系统会进入停止状态，此时它不再处理新的 BD，并等待当前 BD 链的 EOF。一旦收到 EOF，系统会尝试清除该通道的所有剩余 BD，重置内部模块并更新状态。然后，状态寄存器上的 halt_complete 位会置高，这标志着 `soft_reset` 的完成，系统随即进入下一个通道。

如果S2MM通道出现任何错误，您需要检查通道中断监视寄存器以了解出错的通道编号，并通过配置相应通道的通道控制寄存器发出`soft_reset` 。在软复位时，通道进入停止状态，系统重置其子模块和内部缓冲区。在此期间，相应的通道被禁用，并且对应通道的 `s2mm_prmry_reset_out_perch_n` 端口变为低电平。

一旦软复位完成，通道状态寄存器上的停止完成位会变为高电平，以向用户标记软复位的完成。在 `soft_reset` 完成后，`s2mm_prmry_reset_out_perch_n` 端口对于特定通道回到高电平。系统随后继续下一个通道。

如果用户通过编程相应的通道控制寄存器为特定的 S2MM 通道应用 `soft_reset` ，系统将进入停止状态，在该状态下不再处理新的 BD，并等待当前 BD 的 TLAST。一旦接收到 TLAST，系统会尝试清除该特定通道的所有剩余数据包，重置内部模块并更新状态。然后状态寄存器上的 halt_complete 位会置高，这标志着`soft_reset` 的完成，系统将进入下一个通道。

2. When only MM2S is enabled and number of channels is greater than 1.
3. When only S2MM is enabled and number of channels is greater than 1.

Enabling this option isolates the resets per channel to handle independent down stream modules on each channel. The system waits until the jobs in the particular channel are finished and then proceeds to the next channel.

In case of any error in MM2S channel, you need to check the channel interrupt monitor register to know about the errored channel number and issue a `soft_reset` by programming the channel control register of the respective channel. Upon soft reset, the channel goes to halt state and the system resets its sub-blocks and internal buffers. During this time, the respective channel is disabled and `mm2s_prmry_reset_out_perch_n` port goes LOW for the corresponding channel. Once soft reset is complete, halt complete bit on the channel status register goes HIGH to mark the completion of soft reset to the user.

In case `soft_reset` was not successful, the system waits for the completion of timeout period. Upon completion of `soft_reset`, `mm2s_prmry_reset_out_perch_n` port goes back to HIGH for the particular channel. The system then proceeds to the next channel to process.

To apply a `soft_reset` for a particular MM2S channel by programming the respective channel control register, the system goes to a halt state where it no longer processes new BDs and waits for the EOF of the current BD chain. Once EOF is received, the system tries to flush all the remaining BD's for the particular channel, resets internal blocks and updates the status. Then halt_complete bit on the status register goes high which marks the completion of `soft_reset` and the system moves to the next channel.

In case of any error in S2MM channel, you need to check the channel interrupt monitor register to know about the errored channel number and issue a `soft_reset` by programming the channel control register of the respective channel. Upon soft reset, the channel goes to halt state and the system resets its sub blocks and internal buffers. During this time the respective channel is disabled and `s2mm_prmry_reset_out_perch_n` port goes LOW for the corresponding channel.

Once soft reset is complete, halt complete bit on the channel status register goes HIGH to mark the completion of soft reset to the user. Upon completion of `soft_reset`, `s2mm_prmry_reset_out_perch_n` port goes back to HIGH for the particular channel. The system then proceeds to the next channel.

If user applies a `soft_reset` for a particular S2MM channel by programming the respective channel control register, the system goes to a halt state where it no longer processes new BDs and waits for the TLAST for the current BD. Once TLAST is received, the system tries to flush all the remaining packets for the particular channel, resets internal blocks and updates the status. Then halt_complete bit on the status register goes high, which marks the completion of `soft_reset` and the system moves to the next channel.

应用 `soft_reset` 清除了相应公共通道中断监视寄存器上的中断。执行 `soft_reset` 后，通过将相应通道控制寄存器的运行/停止位重新编程为 '1' 并将软 _ 复位位设置为 '0' 来重新启用相应通道。

在进行软复位时，所有连接到该通道的下游模块都必须重置。

地址宽度（*32* 到 *64*）

指定地址空间的宽度。它可以是32到64之间的任何值。

高级选项卡

以下是“高级”选项卡的字段描述。

图 8：高级选项卡

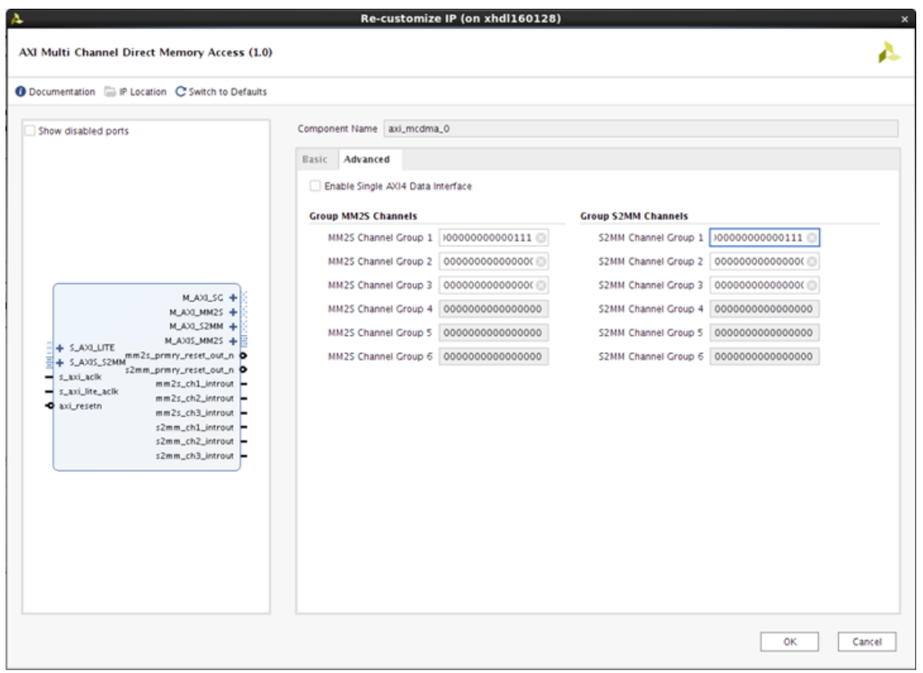

启用单 *AXI4* 数据接口

此选项将 MM2S 和 S2MM AXI4 接口合并为单个接口，以便在 IP 集成器中使用。仅当 AXI4 接口在相同的时钟下运行并且拥有相同的数据宽度时，才能将它们合并。

Applying `soft_reset` clears the interrupt on respective common channel interrupt monitor register. After `soft_reset`, re-enable the corresponding channel by re-programing the run/stop bit to '1' and soft_reset bit to '0' of the respective channel control register.

In case of a soft reset, all the down stream modules connected to that channel have to be reset.

Address Width (32 to 64)

Specify the width of the Address Space. It can be any value from 32 to 64.

Advanced Tab

The following are the field descriptions for the Advanced tab.

Figure 8: **Advanced Tab**

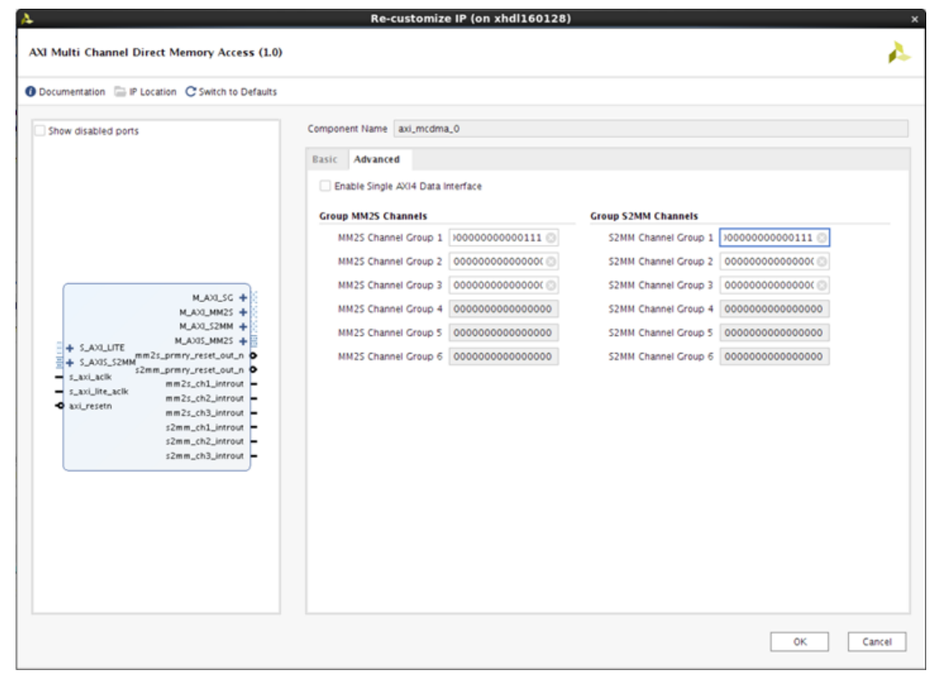

Enable Single AXI4 Data Interface

This option combines the MM2S and S2MM AXI4 interfaces into a single interface for ease of use in the IP integrator. The AXI4 interfaces can be combined only when they operate on the same clock and have the same data widths.

分组 *MM2S* 和 *S2MM* 通道

AXI MCDMA IP 允许对通道进行分组，以便单个观察者监控特定通道的状态。16 个通道可以分配到六个组中。可以通过将相应的位设置为 1 来启用通道。各组应相互独立，也就是说，一个通道不能同时在两个组中被选中。MM2S 和 S2MM 各有六个组。通道选择是从最低有效位到最高有效位指定的。例如，如果启用了六个通道，请在位 [5:0] 中指定通道选择。在这种情况下，最高有效位将被忽略。

用户参数

下表显示了 Vivado IDE 中各字段与用户参数之间的关系（可在工具命令语言 (Tcl) 控制台中查看）。

表 60：Vivado IDE 参数与用户参数关系

Vivado 集成开发环境参数	参数名称	默认值	允许的值
启用异步时钟	c_prmry_是_aclk_异步	假	真, 假
启用控制/状态流	c_sg_include_stscntrl_strm	假	真, 假
缓冲区长度寄存器的宽度	c_sg_长度_宽度	14	8-26
地址宽度（32-64）	c 地址宽度_ _	32	32-64
通道数量 (MM2S)	c 数 mm2s 通道_ _ _	1	1-16
内存映射数据宽度 (MM2S)	c m axi mm2s 数据宽度_ _ _ _ _	32	32-1024
流数据宽度（MM2S）	c s 轴 mm²/s 数据宽度_ _ _ _ _	32	8-1024
最大突发大小 (MM2S)	c mm2s 爆发大小_ _ _	16	2-256
调度器类型 (MM2S)	c mm2s 调度程序_ _	WRR	可编程：0 严格优先级：1 WRR：2 WRR 公平分配：3
允许未对齐传输（MM2S）	c 包含 mm2s dre_ _ _	假	真, 假
通道数量 (S2MM)	c num s2mm 通道_ _ _	1	1-16
内存映射数据宽度 (S2MM)	c m axi s2mm 数据宽度_ _ _ _ _	32	32-1024
流数据宽度（S2MM）	c s 轴 s2mm 数据宽度_ _ _ _ _	32	8-1024
最大突发大小（S2MM）	c s2mm 爆发大小_ _ _	16	2-256
允许未对齐传输（S2MM）	c 包含 s2mm dre_ _ _	假	真, 假
启用每通道软复位	C 启用多通道 CH 重置_ _ _ _	0	0,1
禁用数据包丢弃	C 以太网 DMA_ _	0	0,1
在状态流中使用 RxLength	c_sg_使用_stsapp_长度	假	真, 假
MM2S 通道组 1	c_组1_毫米/秒	0000000000000001	16 位二进制值(1)
MM2S通道组2	c_组2_毫米/秒	0000000000000000	16 位二进制值(1)
MM2S通道组3	c_组3_毫米每秒	0000000000000000	16 位二进制值(1)
MM2S 通道组 4	c_组4_毫米每秒	0000000000000000	16 位二进制值(1)
MM2S 通道组 5	c_组5_毫米/秒	0000000000000000	16 位二进制值(1)

Grouping MM2S and S2MM Channels

The AXI MCDMA IP allows grouping of channels to allow an individual observer to monitor the status of particular channels. The 16 channels can be distributed in six groups. A channel can be enabled by setting the respective bit to 1. The group should be mutually exclusive, that is, one channel cannot be selected under two groups. There are six groups each for MM2S and S2MM. The channel selection is specified from LSB to MSB. For example, if six channels are enabled, specify the channel selection in bits [5:0]. In this case, the MSB bit is ignored.

User Parameters

The following table shows the relationship between the fields in the Vivado IDE and the User Parameters (which can be viewed in the tool command language (Tcl) Console.

Table 60: **Vivado IDE Parameter to User Parameter Relationship**

Vivado IDE Parameter	Parameter Name	Default Value	Allowed Values
Enable Asynchronous Clocks	c_prmry_is_aclk_async	FALSE	TRUE, FALSE
Enable Control/Status Stream	c_sg_include_stscntrl_strm	FALSE	TRUE, FALSE
Width of Buffer Length register	c_sg_length_width	14	8-26
Address Width (32-64)	c_addr_width	32	32-64
Number of Channels (MM2S)	c_num_mm2s_channels	1	1-16
Memory Map Data Width (MM2S)	c_m_axi_mm2s_data_width	32	32-1024
Streaming Data Width (MM2S)	c_s_axis_mm2s_data_width	32	8-1024
Max Burst Size (MM2S)	c_mm2s_burst_size	16	2-256
Scheduler Type (MM2S)	c_mm2s_scheduler	WRR	Programmable: 0 Strict Priority: 1 WRR: 2 WRR Fair Distribution: 3
Allow Unaligned Transfer (MM2S)	c_include_mm2s_dre	FALSE	TRUE, FALSE
Number of Channels (S2MM)	c_num_s2mm_channels	1	1-16
Memory Map Data Width (S2MM)	c_m_axi_s2mm_data_width	32	32-1024
Streaming Data Width (S2MM)	c_s_axis_s2mm_data_width	32	8-1024
Max Burst Size (S2MM)	c_s2mm_burst_size	16	2-256
Allow Unaligned Transfer (S2MM)	c_include_s2mm_dre	FALSE	TRUE, FALSE
Enable Soft reset per channel	C_ENABLE_MULTI_CH_RESET	0	0,1
Disable Packet Drop	C_ETHERNET_DMA	0	0,1
Use RxLength in Status Stream	c_sg_use_stsapp_length	FALSE	TRUE, FALSE
MM2S Channel Group 1	c_group1_mm2s	0000000000000001	16 bit binary value(1)
MM2S Channel Group 2	c_group2_mm2s	0000000000000000	16 bit binary value(1)
MM2S Channel Group 3	c_group3_mm2s	0000000000000000	16 bit binary value(1)
MM2S Channel Group 4	c_group4_mm2s	0000000000000000	16 bit binary value(1)
MM2S Channel Group 5	c_group5_mm2s	0000000000000000	16 bit binary value(1)

表60：Vivado IDE参数与用户参数关系（续）

Vivado IDE 参数	参数名称	默认值	允许的值
MM2S 通道组 6	c_组6_毫米/秒	0000000000000000	16 位二进制值(1)
S2MM 通道组 1	c_组1_s2mm	0000000000000001	16 位二进制值(2)
S2MM 通道组 2	c_组2_s2mm	0000000000000000	16 位二进制值(2)
S2MM 通道组 3	c_组3_s2mm	0000000000000000	16 位二进制值(2)
S2MM 通道组 4	c_组4_s2mm	0000000000000000	16 位二进制值(2)
S2MM 通道组 5	c_组5_s2mm	0000000000000000	16 位二进制值(2)
S2MM 通道组 6	c_组6_s2mm	0000000000000000	16 位二进制值(2)

笔记：
1. 组选择应该是互斥的。将一个位设置为1以启用组中的该通道。 2. 组选择应该是互斥的。将一个位设置为1以启用组中的该通道。

输出生成

有关详细信息，请参阅 *Vivado* 设计套件用户指南：使用 *IP* 进行设计 *(UG896)*。

限制核心

必要的 XDC 约束会随着 Vivado 设计套件中的核心生成一起提供。

必要约束

本部分不适用于此IP核。

器件、封装和速度等级选择

本部分不适用于此IP核。

时钟频率

本部分不适用于此IP核。

时钟管理

本部分不适用于此IP核。

时钟放置

本部分不适用于此IP核。

Table 60: **Vivado IDE Parameter to User Parameter Relationship** *(cont'd)*

Vivado IDE Parameter	Parameter Name	Default Value	Allowed Values
MM2S Channel Group 6	c_group6_mm2s	0000000000000000	16 bit binary value(1)
S2MM Channel Group 1	c_group1_s2mm	0000000000000001	16 bit binary value(2)
S2MM Channel Group 2	c_group2_s2mm	0000000000000000	16 bit binary value(2)
S2MM Channel Group 3	c_group3_s2mm	0000000000000000	16 bit binary value(2)
S2MM Channel Group 4	c_group4_s2mm	0000000000000000	16 bit binary value(2)
S2MM Channel Group 5	c_group5_s2mm	0000000000000000	16 bit binary value(2)
S2MM Channel Group 6	c_group6_s2mm	0000000000000000	16 bit binary value(2)

Notes:
1. The group selection should be mutually exclusive. Set a bit to 1 to enable that channel in a group.
2. The group selection should be mutually exclusive. Set a bit to 1 to enable that channel in a group.

Output Generation

For details, see the *Vivado Design Suite User Guide: Designing with IP* (UG896).

Constraining the Core

Necessary XDC constraints are delivered along with the core generation in the Vivado Design Suite.

Required Constraints

This section is not applicable for this IP core.

Device, Package, and Speed Grade Selections

This section is not applicable for this IP core.

Clock Frequencies

This section is not applicable for this IP core.

Clock Management

This section is not applicable for this IP core.

Clock Placement

This section is not applicable for this IP core.

银行业

本部分不适用于此IP核。

收发器位置

本部分不适用于此IP核。

I/O 标准和布局

本部分不适用于此IP核。

模拟

有关 AMD VivadoTM 仿真组件的全面信息，以及使用支持的第三方工具的信息，请参阅 Vivado 设计套件用户指南：逻辑仿真 (UG900)。

重要！对于面向 *7 系列或 AMD ZynqTM 7000* 器件的核心，不支持 *UNIFAST* 库。*AMD IP* 仅在 *UNISIM* 库中经过测试和认证。

综合与实现

有关综合和实现的详细信息，请参阅 Vivado 设计套件用户指南：使用 IP 设计 (UG896)。

Banking

This section is not applicable for this IP core.

Transceiver Placement

This section is not applicable for this IP core.

I/O Standard and Placement

This section is not applicable for this IP core.

Simulation

For comprehensive information about AMD Vivado™ simulation components, as well as information about using supported third-party tools, see the *Vivado Design Suite User Guide: Logic Simulation* (UG900).

IMPORTANT! *For cores targeting 7 series or AMD Zynq™ 7000 devices, UNIFAST libraries are not supported. AMD IP is tested and qualified with UNISIM libraries only.*

Synthesis and Implementation

For details about synthesis and implementation, see the *Vivado Design Suite User Guide: Designing with IP* (UG896).

示例设计

本章包含有关 AMD VivadoTM 设计套件中提供的示例设计的信息。顶层模块实例化了实现硬件设计所需的核心和示例设计的所有组件，如下所示。这包括时钟向导、寄存器配置、数据生成器和数据检查器模块。

图 9：方框图

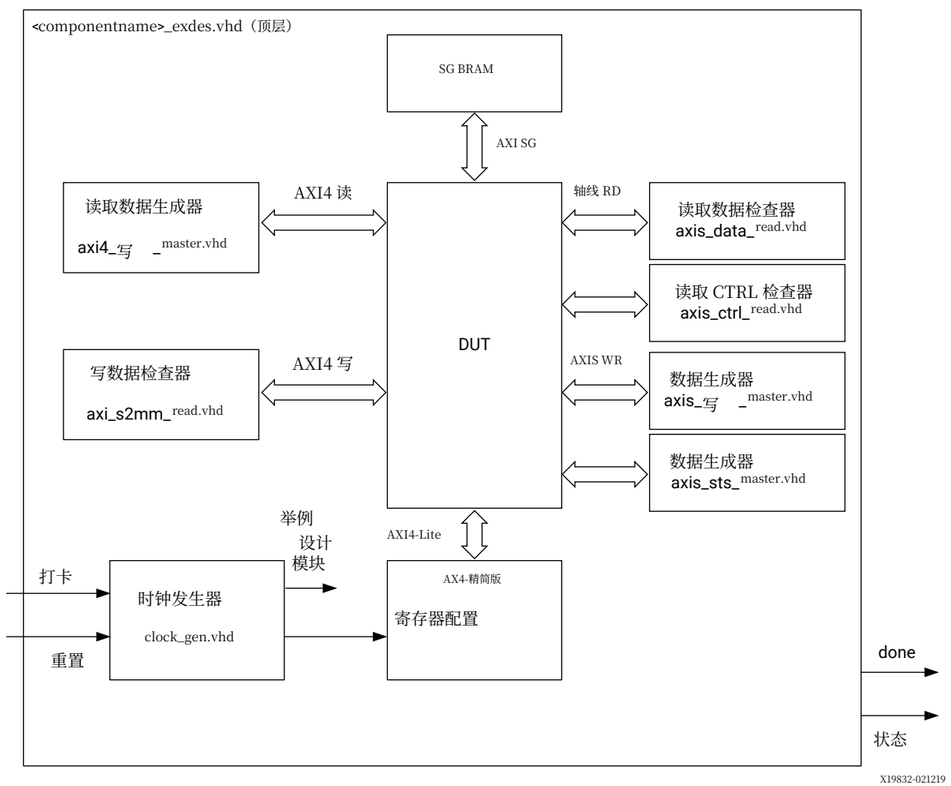

此示例设计演示了在被测设备（DUT）的 AXI4-Lite、AXI4 和 AXI4-Stream 接口上的事务。

Example Design

This chapter contains information about the example design provided in the AMD Vivado™ Design Suite. The top module instantiates all components of the core and example design that are needed to implement the design in hardware, as shown below. This includes clocking wizard, register configuration, data generator, and data checker modules.

Figure 9: **Block Diagram**

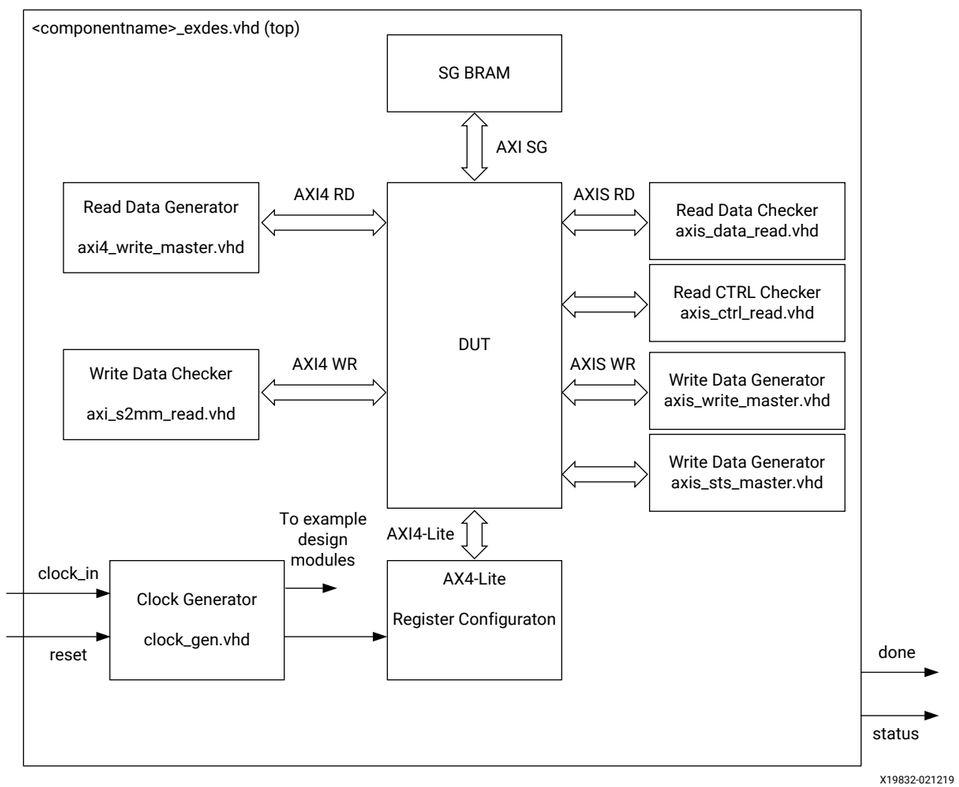

This example design demonstrates transactions on the AXI4-Lite, AXI4, and AXI4-Stream interfaces of the device under test (DUT).

- 时钟发生器：MMCME2 用于为示例设计生成时钟。该模块生成运行 IP 所需的各种时钟。
- 寄存器配置模块：该模块按照编程顺序配置DUT寄存器。该模块是一个AXI流量生成器模块，用于配置寄存器。更多信息请参考AXI流量生成器LogiCORE IP产品指南（PG125）。
- 读取路径生成器：该模块使用一个 AXI 块 RAM，在 MMCME2 锁定后填充固定数量的传输。MM2S 通道读取该 AXI 块 RAM 并将数据传输到 AXI4-Stream 接口。
- 读取路径检查器：此模块检查在 MM2S AXI4-Stream 接口上传输的数据。
- 读路径 CTRL 检查器：该模块用于检查通过 MM2S AXI4-Stream 控制接口传输的数据。
- 写路径生成器：当写入 (S2MM) 通道被配置时，该模块在 S2MM AXI4-Stream 接口上驱动事务（具有固定数量的传输）。
- 写入路径 STS 生成器：此模块生成 S2MM STS 数据流 m.
- 写路径检查器：此模块检查在AXI4接口上接收到的数据。接收到的数据也会被写入另一个AXI块RAM。

测试在 `clk_wiz` 锁定后不久开始。所有事务完成后，Done 引脚被置为高电平。同样，当数据完整性检查成功时，Status 引脚被置为高电平。这两个引脚可以连接到 LED，以获取测试状态。

实施示例设计

有关综合和实现的详细信息，请参阅 Vivado 设计套件用户指南：使用 IP 设计 (UG896)。

按照第五章：设计流程步骤中描述的步骤操作后，实现示例设计如下：

1. 在层级窗口中右键点击核心，然后选择打开 IP 示例设计。
2. 会弹出一个新窗口，要求你指定示例设计的目录。选择一个新目录或保留默认目录。所选目录中会自动创建一个新项目，并在新的 Vivado IDE 窗口中打开。
3. 在流导航器（左侧窗格）中，点击运行实现并按照说明操作。在当前项目目录中，将创建一个带有 `name _ex0` 的新项目，并将文件交付到该目录中。该目录及其子目录包含创建 AXI MCDMA 控制器示例设计所需的所有源文件。

- **Clock Generator:** MMCME2 is used to generate the clocks for the example design. This module generates various clocks needed to run the IP.
- **Register Configuration Module:** This module configures the DUT registers as mentioned in Programming Sequence. This module is an AXI Traffic Generator module that is configured to program the registers. For more information, refer to the *AXI Traffic Generator LogiCORE IP Product Guide* (PG125).
- **Read Path Generator:** This uses an AXI block RAM that is filled with a fixed amount of transfers after MMCME2 is locked. MM2S channel reads this AXI block RAM and transfers data to the AXI4-Stream interface.
- **Read Path Checker:** This module checks the data transferred on the MM2S AXI4-Stream interface.
- **Read Path CTRL Checker:** This module checks the data transferred on the MM2S AXI4-Stream Control Interface.
- **Write Path Generator:** When the Write (S2MM) channel is configured, this module drives the transactions (with a fixed amount of transfers) on the S2MM AXI4-Stream interface.
- **Write Path STS Generator:** This module generates the S2MM STS data stream.
- **Write Path Checker:** This module checks the data received on the AXI4 interface. Data received on the AXI4 interface is also written into another AXI block RAM.

The test starts soon after `clk_wiz` is locked. The Done pin is asserted High after all the transactions are completed. Similarly, the Status pin is asserted High when the data integrity check is successful. These two pins can be connected to LEDs to obtain the status of the test.

Implementing the Example Design

For details about synthesis and implementation, see the *Vivado Design Suite User Guide: Designing with IP* (UG896).

After following the steps described in Chapter 5: Design Flow Steps, implement the example design as follows:

1. Right-click the core in the Hierarchy window and select Open IP Example Design.
2. A new window pops up, asking you to specify a directory for the example design. Select a new directory or keep the default directory. A new project is automatically created in the selected directory and opened in a new Vivado IDE window.
3. In the Flow Navigator (left-side pane), click Run Implementation and follow the directions. In the current project directory, a new project with the `name _ex0` is created and the files are delivered in that directory. This directory and its subdirectories contain all the source files that are required to create the AXI MCDMA controller example design.

模拟示例设计

使用 AXI MCDMA 示例设计（作为 AXI MCDMA 的一部分提供），可以快速模拟并观察 AXI MCDMA 的行为。该仿真脚本会编译 AXI MCDMA 示例设计及支持的仿真文件。它运行仿真并检查以确保仿真成功完成。

如果测试失败，将显示以下消息：

```
Test Failed!!!
```

如果测试通过，将显示以下消息：

```
Test Completed Successfully
```

如果测试挂起，将显示以下消息：

```
Test Failed!! Test Timed Out
```

示例设计的测试平台

本节 包含有关 Vivado 设计套件中提供的测试平台的信息 .

图10：测试台

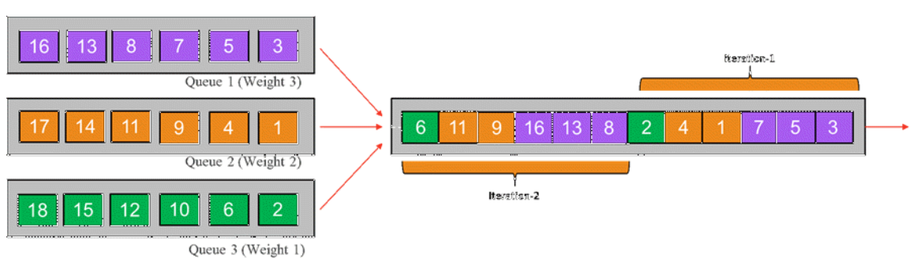

前图显示了AXI MCDMA示例设计的测试平台。顶层测试平台生成一个200 MHz的差分时钟，并向示例设计施加初始复位。

Simulating the Example Design

Using the AXI MCDMA example design (delivered as part of the AXI MCDMA), the behavior of the AXI MCDMA can be quickly simulated and observed. The simulation script compiles the AXI MCDMA example design and supporting simulation files. It runs the simulation and checks to ensure that it completed successfully.

If the test fails, the following message displays:

```
Test Failed!!!
```

If the test passes, the following message displays:

```
Test Completed Successfully
```

If the test hangs, the following message displays:

```
Test Failed!! Test Timed Out
```

Test Bench for the Example Design

This section contains information about the provided test bench in the Vivado Design Suite.

Figure 10: **Test Bench**

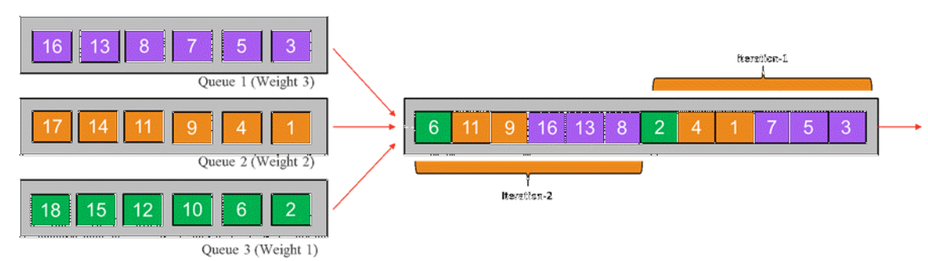

The preceding figure shows the test bench for the AXI MCDMA example design. The top-level test bench generates a 200 MHz differential clock and drives an initial reset to the example design.

升级

本附录不适用于核心的第一次发布。

Upgrading

This appendix is not applicable for the first release of the core.

调试

本附录包括有关 AMD 支持网站上可用资源和调试工具的详细信息。

如果 IP 需要许可证密钥，则必须验证该密钥。AMD VivadoTM 设计工具在流程中对受许可证保护的 IP 设置了多个许可证检查点。如果许可证检查成功，IP 可以继续生成。否则，生成将因错误而停止。以下工具会执行许可证检查点：

- Vivado 综合
- Vivado 实现
- 写入_比特流 (Tcl 命令)

重要！在检查点会忽略 *IP* 许可级别。测试会确认存在有效许可，但不会检查 *IP* 许可级别。

寻求 AMD 自适应计算解决方案的帮助

为了在使用核心时帮助设计和调试过程，支持网页包含关键资源，例如产品文档、发布说明、解答记录、已知问题的信息以及获取进一步产品支持的链接。社区论坛也可供成员学习、参与、分享并提出有关AMD自适应计算解决方案的问题。

文档

本产品指南是与核心相关的主要文档。本指南以及与设计过程相关的所有产品文档可以在 AMD 自适应支持网页上找到，或通过使用 AMD 自适应计算文档导航器找到。请从下载页面下载文档导航器。有关此工具及可用功能的更多信息，请在安装后打开联机帮助。

Debugging

This appendix includes details about resources available on the AMD Support website and debugging tools.

If the IP requires a license key, the key must be verified. The AMD Vivado™ design tools have several license checkpoints for gating licensed IP through the flow. If the license check succeeds, the IP can continue generation. Otherwise, generation halts with an error. License checkpoints are enforced by the following tools:

- Vivado Synthesis
- Vivado Implementation
- write_bitstream (Tcl command)

IMPORTANT! *IP license level is ignored at checkpoints. The test confirms a valid license exists. It does not check IP license level.*

Finding Help with AMD Adaptive Computing Solutions

To help in the design and debug process when using the core, the Support web page contains key resources such as product documentation, release notes, answer records, information about known issues, and links for obtaining further product support. The Community Forums are also available where members can learn, participate, share, and ask questions about AMD Adaptive Computing solutions.

Documentation

This product guide is the main document associated with the core. This guide, along with documentation related to all products that aid in the design process, can be found on the AMD Adaptive Support web page or by using the AMD Adaptive Computing Documentation Navigator. Download the Documentation Navigator from the Downloads page. For more information about this tool and the features available, open the online help after installation.

答题记录

答复记录包括有关常见问题的信息、解决这些问题的有用信息以及 AMD 自适应计算产品的任何已知问题。答复记录每天都会创建和维护，以确保用户能够获取最准确的信息。

可以通过在 AMD Adaptive Support 主网页上的搜索支持框中使用搜索来查找此核心的答复记录。为了最大化您的搜索结果，请使用以下关键词：

- 产品名称
- 工具消息
- 遇到问题的总结

在返回结果后，可以使用筛选搜索来进一步精准定位结果。

核心主答记录

AR 69734.

技术支持

当按产品文档所述使用此 AMD LogiCORETM IP 产品时，AMD 自适应计算会在社区论坛上提供技术支持。如果您进行以下任何操作，AMD 自适应计算无法保证时序、功能或提供支持：

- 在未在文档中定义的设备上实现该解决方案。
- 自定义解决方案，超出产品文档中允许的范围。
- 更改设计中标记为“请勿修改”的任何部分。

如有疑问，请访问社区论坛。

调试工具

有许多工具可用于解决 AXI MCDMA 设计问题。了解哪些工具在调试各种情况时有用非常重要。

Answer Records

Answer Records include information about commonly encountered problems, helpful information on how to resolve these problems, and any known issues with an AMD Adaptive Computing product. Answer Records are created and maintained daily to ensure that users have access to the most accurate information available.

Answer Records for this core can be located by using the Search Support box on the main AMD Adaptive Support web page. To maximize your search results, use keywords such as:

- Product name
- Tool message(s)
- Summary of the issue encountered

A filter search is available after results are returned to further target the results.

Master Answer Record for the Core

AR 69734.

Technical Support

AMD Adaptive Computing provides technical support on the Community Forums for this AMD LogiCORE™ IP product when used as described in the product documentation. AMD Adaptive Computing cannot guarantee timing, functionality, or support if you do any of the following:

- Implement the solution in devices that are not defined in the documentation.
- Customize the solution beyond that allowed in the product documentation.
- Change any section of the design labeled DO NOT MODIFY.

To ask questions, navigate to the Community Forums.

Debug Tools

There are many tools available to address AXI MCDMA design issues. It is important to know which tools are useful for debugging various situations.

Vivado 设计套件调试功能

AMD Vivado™ 设计套件的调试功能可以将逻辑分析仪和虚拟 I/O 核直接插入到您的设计中。调试功能还允许您设置触发条件，以在硬件中捕获应用程序和集成块端口信号。捕获的信号随后可以进行分析。Vivado IDE 中的此功能用于在 AMD 设备上运行的设计的逻辑调试和验证。

Vivado 逻辑　　分析器用于与逻辑调试 LogiCORE IP 核进行交互，包括：

- ILA 2.0（及更高版本）
- VIO 2.0（及更高版本）

请参阅 *Vivado* 设计套件用户指南：编程与调试 *(UG908)*。

硬件调试

硬件问题可能范围广泛，从链路启动故障到长时间测试后出现的问题。本节提供常见问题的调试步骤。AMD Vivado™ 调试功能是进行硬件调试的重要资源。以下各节中提到的信号名称可以使用调试功能进行探测，以调试特定问题。

- 你已经编程了你的BD环，但似乎没有任何效果。必须遵循寄存器编程顺序才能启动MCDMA。请参阅编程顺序和描述符管理。
- 状态寄存器中设置了内部错误/错误位
- 当描述符中指定的要传输的字节数（BTT）为0时，会设置内部错误。

如果获取的BD是已完成的BD，则设置• SG内部错误。

- 其他错误位，如解码错误或从设备错误，也会根据互连或从设备的响应而设置。
- 您正在从某个位置读取数据，但这些数据似乎没有按顺序排列。请验证起始地址位置是对齐还是未对齐。如果未对齐，请确保在配置 MCDMA 时启用了 DRE。

另请参阅 AMD 解决方案中心，以获取有关设备、软件工具和知识产权在设计周期各阶段的支持。主题包括设计帮助、建议和故障排除技巧。

Vivado Design Suite Debug Feature

The AMD Vivado™ Design Suite debug feature inserts logic analyzer and virtual I/O cores directly into your design. The debug feature also allows you to set trigger conditions to capture application and integrated block port signals in hardware. Captured signals can then be analyzed. This feature in the Vivado IDE is used for logic debugging and validation of a design running in AMD devices.

The Vivado logic analyzer is used to interact with the logic debug LogiCORE IP cores, including:

- ILA 2.0 (and later versions)
- VIO 2.0 (and later versions)

See the *Vivado Design Suite User Guide: Programming and Debugging* (UG908).

Hardware Debug

Hardware issues can range from link bring-up to problems seen after hours of testing. This section provides debug steps for common issues. The AMD Vivado™ debug feature is a valuable resource to use in hardware debug. The signal names mentioned in the following individual sections can be probed using the debug feature for debugging the specific problems.

- You have programmed your BD ring but nothing seems to work. The register programming sequence has to be followed to start the MCDMA. See Programming Sequence and Descriptor Management.
- Internal Error/Error bits set in the Status register
- An internal error is set when the bytes to transfer (BTT) specified in the descriptor is 0.
- SG internal error is set if the fetched BD is a completed BD.
- Other error bits like Decode Error or Slave Error is also set based on the response from Interconnect or Slave.
- You are reading data from a location, but the data does not seem to be in order. Verify if the start address location is aligned or unaligned. If it is not aligned, ensure that the DRE is enabled while configuring MCDMA.

Also see the AMD Solution Centers for support on devices, software tools, and intellectual property at all stages of the design cycle. Topics include design assistance, advisories, and troubleshooting tips.

附录 C

附加资源与法律声明

查找附加文档

技术信息门户

AMD 技术信息门户是一个在线工具，通过您的网页浏览器提供强大的文档搜索和导航功能。要访问技术信息门户，请访问 https://docs.amd.com。

文档导航器

文档导航器 (DocNav) 是一个已安装的工具，它可以访问 AMD 自适应计算的文档、视频和支持资源，您可以通过筛选和搜索来查找信息。要打开 DocNav：

- 在 AMD Vivado™ IDE 中，选择帮助 → 文档和教程。
- 在 Windows 上，点击开始按钮并选择 Xilinx 设计工具 → DocNav。
- 在 Linux 命令提示符下，输入 `docnav`。

注意：有关 DocNav 的更多信息，请参阅《文档导航器用户指南》(UG968)。

设计中心

AMD 设计中心提供按设计任务和其他主题整理的文档链接，您可以利用这些链接学习关键概念并解决常见问题。要访问设计中心：

- 在 DocNav 中，点击设计中心视图标签。
- 访问设计中心网页。

Appendix C

Additional Resources and Legal Notices

Finding Additional Documentation

Technical Information Portal

The AMD Technical Information Portal is an online tool that provides robust search and navigation for documentation using your web browser. To access the Technical Information Portal, go to https://docs.amd.com.

Documentation Navigator

Documentation Navigator (DocNav) is an installed tool that provides access to AMD Adaptive Computing documents, videos, and support resources, which you can filter and search to find information. To open DocNav:

- From the AMD Vivado™ IDE, select **Help → Documentation and Tutorials**.
- On Windows, click the **Start** button and select **Xilinx Design Tools → DocNav**.
- At the Linux command prompt, enter `docnav`.

Note: For more information on DocNav, refer to the *Documentation Navigator User Guide* (UG968).

Design Hubs

AMD Design Hubs provide links to documentation organized by design tasks and other topics, which you can use to learn key concepts and address frequently asked questions. To access the Design Hubs:

- In DocNav, click the **Design Hubs View** tab.
- Go to the Design Hubs web page.

支持资源

有关支持资源，如答案、文档、下载和论坛，请参见支持页面。

参考文献

这些文件提供了本指南的补充材料：

1. AXI流量生成器LogiCORE IP产品指南 (PG125) 2. Vivado设计套件用户指南：使用IP设计 (UG896) 3. Vivado设计套件用户指南：逻辑仿真 (UG900) 4. Vivado设计套件用户指南：实现 (UG904) 5. Vivado设计套件用户指南：编程与调试 (UG908) 6. Vivado设计套件用户指南：入门 (UG910) 7. 从ISE迁移到Vivado设计套件指南 (UG911) 8. Vivado设计套件用户指南：使用IP Integrator设计IP子系统 (UG994) 9. Vivado设计套件：AXI参考指南 (UG1037) 10. Vivado设计套件用户指南：版本说明、安装与许可 (UG973)

修订历史

下表显示了本文件的修订历史。

部分	修订摘要
2024/11/13 版本 1.2	
注册空间	功能增强和注册更新。
启用每通道软复位	已添加该部分 .
禁用数据包丢弃	已添加该部分。
功能摘要	已添加频道重置功能。
端口描述	已更新表格。
编程顺序	已更新主题。
中断	已更新主题。
S2MM上的数据包丢失	已更新主题。

Support Resources

For support resources such as Answers, Documentation, Downloads, and Forums, see Support.

References

These documents provide supplemental material useful with this guide:

1. *AXI Traffic Generator LogiCORE IP Product Guide* (PG125)
2. *Vivado Design Suite User Guide: Designing with IP* (UG896)
3. *Vivado Design Suite User Guide: Logic Simulation* (UG900)
4. *Vivado Design Suite User Guide: Implementation* (UG904)
5. *Vivado Design Suite User Guide: Programming and Debugging* (UG908)
6. *Vivado Design Suite User Guide: Getting Started* (UG910)
7. *ISE to Vivado Design Suite Migration Guide* (UG911)
8. *Vivado Design Suite User Guide: Designing IP Subsystems using IP Integrator* (UG994)
9. *Vivado Design Suite: AXI Reference Guide* (UG1037)
10. *Vivado Design Suite User Guide: Release Notes, Installation, and Licensing* (UG973)

Revision History

The following table shows the revision history for this document.

Section	Revision Summary
11/13/2024 Version 1.2	
Register Space	Feature enhancement and register updates.
Enable Soft Reset Per Channel	Added the section.
Disable Packet Drop	Added the section.
Feature Summary	Added the channel reset feature.
Port Descriptions	Updated the table.
Programming Sequence	Updated the topic.
Interrupts	Updated the topic.
Packet Drop on S2MM	Updated the topic.

部分	修订摘要
2023/10/18 版本 1.1	
整份文件	仅编辑更新。
2022/11/02 版本 1.1	
整份文件	• 在功能中更新了支持的软件驱动程序。 • 关于数据包交错支持的附加说明 功能摘要 • 时钟记录中的更新文本。 • 已更新“允许非对齐传输”中的备注。 • 更新了缓冲长度寄存器的宽度方程。
2019/05/22 版本 1.1	
特性和分散聚集缓冲区描述符	• 更新的支持软件驱动程序和裸机脚注 在功能中 . • 更新了表51和表56中的TID描述。
2018/10/04 版本 1.0	
初始版本。	N/A

请阅读：重要法律通知

本文档中提供的信息仅供参考，可能包含技术不准确、遗漏和印刷错误。本文所含信息可能会发生变化，并可能因多种原因而变得不准确，包括但不限于产品和路线图的更改、组件和主板版本的变更、新型号和/或新产品发布、不同制造商之间的产品差异、软件更改、BIOS刷新、固件升级等。任何计算机系统都存在无法完全防止或缓解的安全漏洞风险。AMD 对更新或以其他方式更正或修订本信息不承担任何义务。然而，AMD 保留不时修订本信息及对其内容进行更改的权利，且无义务通知任何人此类修订或更改。本信息按“原样”提供。AMD 不对其内容做出任何陈述或保证。

Section	Revision Summary
10/18/2023 Version 1.1	
Entire document	Editorial updates only.
02/11/2022 Version 1.1	
Entire document	• Updated Supported S/W Drivers in Features. • Added note about packet interleaving support in Feature Summary. • Updated text in Clocking. • Updated note in Allow Unaligned Transfers. • Updated equation in Width of Buffer Length Register.
05/22/2019 Version 1.1	
Features and Scatter Gather Buffer Descriptor	• Updated Supported S/W Drivers and baremetal footnote in Features. • Updated TID description in Table 51 and Table 56.
10/04/2018 Version 1.0	
Initial release.	N/A

Please Read: Important Legal Notices

The information presented in this document is for informational purposes only and may contain technical inaccuracies, omissions, and typographical errors. The information contained herein is subject to change and may be rendered inaccurate for many reasons, including but not limited to product and roadmap changes, component and motherboard version changes, new model and/or product releases, product differences between differing manufacturers, software changes, BIOS flashes, firmware upgrades, or the like. Any computer system has risks of security vulnerabilities that cannot be completely prevented or mitigated. AMD assumes no obligation to update or otherwise correct or revise this information. However, AMD reserves the right to revise this information and to make changes from time to time to the content hereof without obligation of AMD to notify any person of such revisions or changes. THIS INFORMATION IS PROVIDED "AS IS." AMD MAKES NO REPRESENTATIONS OR WARRANTIES WITH RESPECT TO THE CONTENTS HEREOF AND ASSUMES NO RESPONSIBILITY FOR ANY INACCURACIES, ERRORS, OR OMISSIONS THAT MAY APPEAR IN THIS INFORMATION. AMD SPECIFICALLY DISCLAIMS ANY IMPLIED WARRANTIES OF NON-INFRINGEMENT, MERCHANTABILITY, OR FITNESS FOR ANY PARTICULAR PURPOSE. IN NO EVENT WILL AMD BE LIABLE TO ANY PERSON FOR ANY RELIANCE, DIRECT, INDIRECT, SPECIAL, OR OTHER CONSEQUENTIAL DAMAGES ARISING FROM THE USE OF ANY INFORMATION CONTAINED HEREIN, EVEN IF AMD IS EXPRESSLY ADVISED OF THE POSSIBILITY OF SUCH DAMAGES.

汽车应用免责声明

汽车产品（在零件编号中标识为“XA”）未经保修允许用于安全气囊的部署或影响车辆控制的应用（“安全应用”），除非该产品具备符合 ISO 26262 汽车安全标准的安全概念或冗余特性（“安全设计”）。客户在使用或分发包含这些产品的任何系统之前，应彻底进行安全性测试。在没有安全设计的情况下将产品用于安全应用，风险完全由客户自行承担，仅受适用法律法规关于产品责任限制的约束。

版权

© 版权 2017-2024 高级微设备公司（Advanced Micro Devices, Inc.）。AMD、AMD箭头标志、Spartan、UltraScale、UltraScale+、Versal、Vivado、Zynq 及其组合均为高级微设备公司（Advanced Micro Devices, Inc.）的商标。本出版物中使用的其他产品名称仅用于识别目的，可能是其各自公司拥有的商标。

AUTOMOTIVE APPLICATIONS DISCLAIMER

AUTOMOTIVE PRODUCTS (IDENTIFIED AS "XA" IN THE PART NUMBER) ARE NOT WARRANTED FOR USE IN THE DEPLOYMENT OF AIRBAGS OR FOR USE IN APPLICATIONS THAT AFFECT CONTROL OF A VEHICLE ("SAFETY APPLICATION") UNLESS THERE IS A SAFETY CONCEPT OR REDUNDANCY FEATURE CONSISTENT WITH THE ISO 26262 AUTOMOTIVE SAFETY STANDARD ("SAFETY DESIGN"). CUSTOMER SHALL, PRIOR TO USING OR DISTRIBUTING ANY SYSTEMS THAT INCORPORATE PRODUCTS, THOROUGHLY TEST SUCH SYSTEMS FOR SAFETY PURPOSES. USE OF PRODUCTS IN A SAFETY APPLICATION WITHOUT A SAFETY DESIGN IS FULLY AT THE RISK OF CUSTOMER, SUBJECT ONLY TO APPLICABLE LAWS AND REGULATIONS GOVERNING LIMITATIONS ON PRODUCT LIABILITY.

Copyright

© Copyright 2017-2024 Advanced Micro Devices, Inc. AMD, the AMD Arrow logo, Spartan, UltraScale, UltraScale+, Versal, Vivado, Zynq, and combinations thereof are trademarks of Advanced Micro Devices, Inc. Other product names used in this publication are for identification purposes only and may be trademarks of their respective companies.